Ferroli

RHA

AIR COOLED WATER CHILLERS
AND HEAT PUMPS WITH AXIAL FANS

351 ÷ 625 kW in cooling mode
370 ÷ 658 kW in heating mode

ECO-FRIENDLY R410A REFRIGERANT GAS

EUROVENT CERTIFIED PERFORMANCE

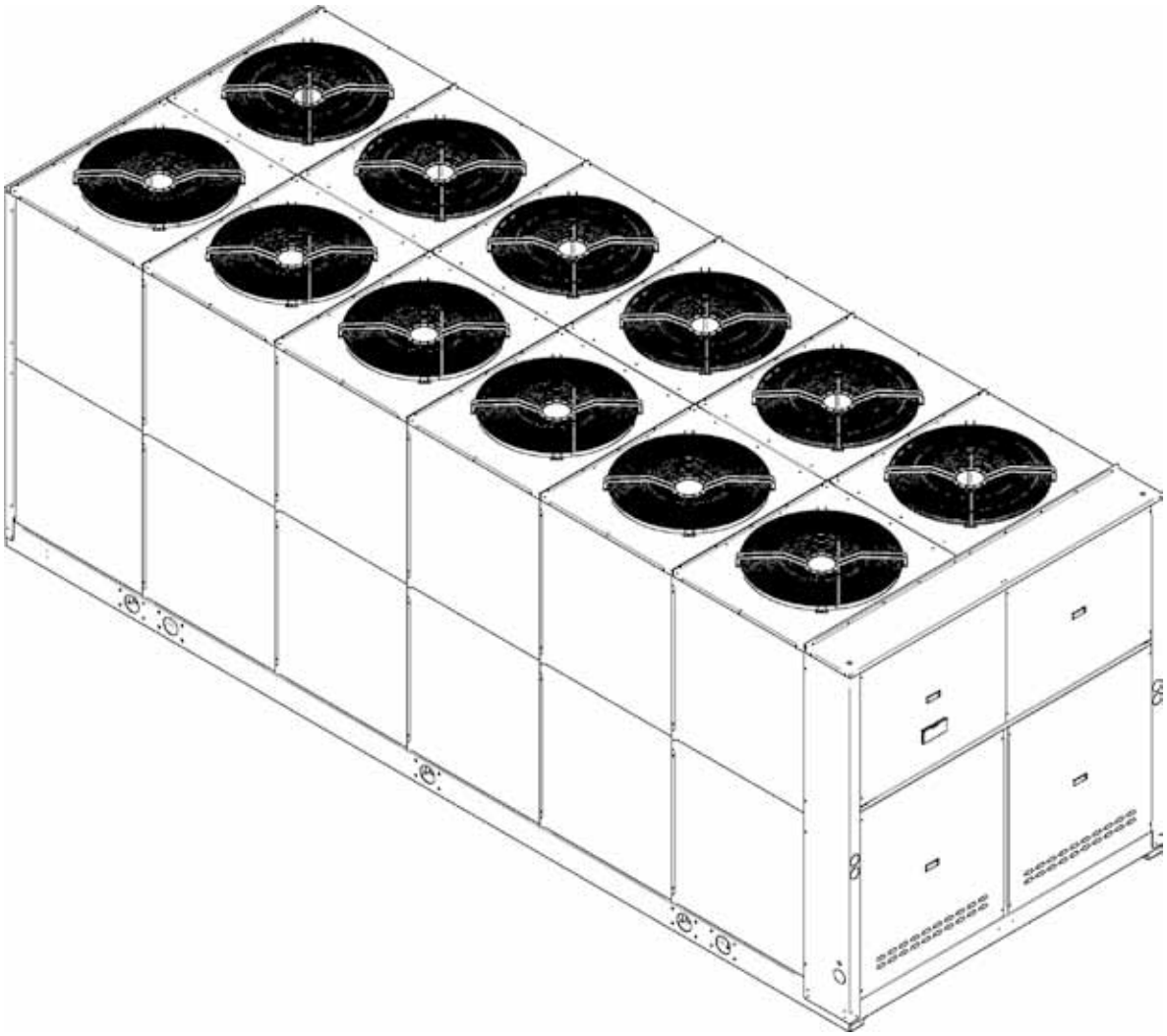

CE

INSTALLATION MANUAL

Dear Customer,
Thank you for having purchased a FERROLI Idustrial coolers. It is the result of many years experience, particular research and has been made with top quality materials and higlly advanced technologies.The CE mark guaranteed thats the appliances meets European Machine Directive requirements regarding safety.
The qualitative level is kept under constant surveillance. FERROLI products therefore offer SAFETY, QUALITY and RELIABILITY.
Due to the continuous improvements in technologies and materials, the product specification as well as performances are subject to variations without prior notice.

Thank you once again for your preference.
FERROLI S.p.A

CE

GB

"CE" DECLARATION OF CONFORMITY
We, the undersigned, hereby declare under our responsibility, that the machine in question complies with the provisions established by Directives :

DE

"EG" KONFORMITÄTSERKLÄRUNG
Wir, die Unterzeichner dies er Erklärung, erklären unter unseren ausschlie ßlichen Verantworfung, daß die genannte Maschine den Bestimmungen der folgenden EG-Richtlinien entspricht :

FR

DECLARATION "CE" DE CONFORMITE
Nous soussignés déclarons, sous notre entière responsabilité, que la machine en objet est conforme aux prescriptions des Directives :

IT

DICHIARAZIONE "CE" DI CONFORMITÀ
Noi sottoscritti dichiariamo, sotto la nostra responsabilità, che la macchina in questione è conforme alle prescrizioni delle Direttive :

ES

DECLARACION "CE" DE CONFORMIDAD
Quienes subscribimos la presente declaracion, declaramos, baio nuestra exclusiva responsabilidad, que la maquina en objeto respeta lo prescrito par las Directivas :

PT

DECLARAÇÃO "CE" DE CONFORMIDADE
Nós, signatários da presente, declaramos sob a nassa exclusiva responsabilidade, que a má quina em questão está em conformidade com as prescrições das Directrizes :

NL

"EG" CONFORMITEITSVERKLARING
Wij ondergetekenden verklaren hierbij op uitsluitend eigen verantwoording dat de bovengenoemde machine conform de voorschriften is van de Richtlijnen:

DK

"CE" OVERENSSTEMMELSESERKLERING
Underfegnede forsikrer under eget ansvar al den ovennævnte maskine er i overensstemmelse med vilkårene i direktiveme :

SE

FÖRSÄKRAN OM "CE" ÖVERENSSTÄMMELSE
Underfecknade försäkrar under eget ansvar alt ovannämnda maskinskinen er i overensstemmelse med vilkarene i direktivene :

NO

BEKREFTELSE OM ÆCEØ OVERENSSTEMMELSE
Underfegnede forsikrer under eget ansvar al den ovennevnte maskinen er i overensstemmelse med vilkarene i direktivene :

FI

"CE" VAATIMUSTENMUKAISUUSVAKUUTUS
Allekirjoittaneet vakuutamme omalla vastuullamme että yllämainittu kone noudattaa ehtoja direktiiveissä :

GR

ΔΗΛΩΣΗ ΣΥΜΒΑΤΟΤΗΤΑΣ "ΕΕ"
Εμετς που υπογραφουμε την παρουσα, δηλωνουμε υπο την αποκλειστικη μας ευθυνη, οτι το μηχανημα συμμορφουται οτα οσ α ορτζουν οι Οδηγιες :

HR

IZJAVA O "CE" SUGLASNOSTI
Mi niže potpisani izjavljujemo, pod našom odgovornošu, da ova Mašina odgovara zahtijevima iz Direktiva :

PL

DEKLARACJA ZGODNOŚCI "CE"
My niżej podpisani oświadczamy z pełną odpowiedzialnością, że niżej wymienione urządzenie w pełni odpowiada postanowieniom przyjętym w następujących Dyrektywach:

2006/42/EC
97/23/EC
2004/108/EC
2006/95/EC

Il legale rappresentante
Dante Ferroli

3QE22170 rev.03

The manufacturer declines all responsibility for any inaccuracies in this manual due to printing or typing errors.
The manufacturer reserves the right to modify the products contents in this catalogue without previous notice.

TABLE OF CONTENTS

THIS MANUAL IS DIVIDED INTO SECTIONS. THEIR NAMES APPEAR IN THE HEADING OF EACH PAGE.

GENERAL SPECIFICATIONS 4
Presentation of the unit 4
General specifications 4
European Directives 4
Identification plate of the Unit 5
Identification code of the unit 5
Description of the components 6
Version with Desuperheater VD
(available for both IR units and IP units) 8

ACCESSORIES AND OPTIONAL EQUIPMENT 9
Mechanical accessories 9
Electrical accessories 11
Mechanical options 11
Electrical options 11

GENERAL TECHNICAL SPECIFICATION 12
General technical specifications 12

NOMINAL PERFORMANCES 13
Standard unit AB - MEDIUM TEMPERATURE PLANT 13
Standard unit AB - LOW TEMPERATURE PLANT 13
Low noise unit AS - MEDIUM TEMPERATURE PLANT 14
Low noise unit AS - LOW TEMPERATURE PLANT 14
Extra low noise unit AX - MEDIUM TEMPERATURE PLANT . . 15
Extra low noise unit AX - LOW TEMPERATURE PLANT 15

STANDARD PERFORMANCES - IR COOLING UNIT ONLY 16
Performances - Standard unit AB 16
Performances - Low noise unit AS 17
Performances - Extra low noise unit AX 18

STANDARD PERFORMANCES - IP HEAT PUMP UNITS 19
Performances in cooling mode - Standard Unit AB 19
Performances in heating mode - Standard Unit AB 20
Performances in cooling mode - Low noise Unit AS 21
Performances in heating mode - Low noise Unit AS 22
Performances in cooling mode - Extra low noise Unit AX 23
Performances in heating mode - Extra low noise Unit AX 24

CORRECTION FACTOR FOR THE USE OF GLYCOL 25
Correction factor for the use of glycol IN HEATING MODE 25
Correction factor for the use of glycol IN COOLING MODE . . . 25

GENERAL SPECIFICATIONS - BRINE UNIT BR - BP 26
Brine Unit BR - BP 26

GENERAL SPECIFICATIONS -
VERSION WITH DESUPERHEATER (VD) - IR COOLING UNIT ONLY 27
Acoustic Version: AB (Standard Unit) 27
Acoustic Version: AS (Low noise Unit) 27
Acoustic Version: AX (Extra low noise Unit) 27
Performances Version with Desuperheater (VD) 28

GENERAL SPECIFICATIONS -
VERSION WITH DESUPERHEATER (VD) - IP HEAT PUMP UNIT 29
Acoustic Version: AB (Standard Unit) 29
Acoustic Version: AS (Low noise Unit) 29
Acoustic Version: AX (Extra low noise Unit) 29
Performances Version with Desuperheater (VD) 30

GENERAL SPECIFICATIONS -
FULL HEAT RECOVERY UNIT (VR) - IP HEAT PUMP UNIT 31
Acoustic Version: AB (Basic Unit) 31
Acoustic Version: AS (Low noise Unit) 31
Acoustic Version: AX (Extra Low noise Unit) 31
Full Heat recovery unit performances (VR) 32

NOISE LEVELS 33
Standard Unit AB 33
Low noise unit AS 33
Extra low moise unit AX 33

OPERATING RANGE 34
Operating range 34

WATER PRESSURE DROP EVAPORATOR 35
Operating range 35

WATER PRESSURE DROP DESUPERHEATER 36
Operating range 36

WORKING HEAD OF THE PUMPING MODULE
MP AM STD AND MP SS STD 37
Operating range 37

HIGH WORKING HEAD OF THE PUMPING MODULE
MP AM HP1 AND MP SS HP1 38
Operating range 38

RECEPTION AND POSITIONING 39
Inspections on arrival 39
Safety prescriptions 39
Handling 39
Storage 39

DIMENSIONAL DATA 40
Overall dimensions 40
Description of the components 40
Minimum space required for operation 41
Vibration-damper installation 41
Area of support 41
Weight during transport 42
Weight during operation 43

HYDRAULIC CONNECTIONS 45
General rules 45
Hydraulic layout of the system 45
Precautions for the Winter 45
Basic diagram Standard Unit VB [COLD WATER CIRCUIT] . . . 46
Basic diagram for units with Desuperheater [HOT WATER CIRCUIT] 46
Air vent and water drain 47
Plumbing connection with Victaulic couplings and Water flow switch 47
Valve regulating diagram valve 47

ELECTRICAL CONNECTIONS 49
General rules 49
Structure of the electric panel 49
Composition of the system 49
Electrical connections 49

R410A PROTECTION DEVICES 52

SERIAL INTERFACE: RS485 MODBUS® RTU 53

REFRIGERANT FLOW DIAGRAM - STANDARD UNIT VB 56
Refrigerant flow diagram in cooling mode IR 56
Refrigerant flow diagram in heating mode IP 57

START-UP 58
General Rules 58

MAINTENANCE 58
General Rules 58
Routine maintenance 58
General considerations 59

SAFETY AND POLLUTION 60
Refrigerant safety card 60
First aid 62

GENERAL SPECIFICATIONS

Presentation of the unit

This new series of industrial chillers and heat pumps has been designed to meet the demands of global markets in the medium-big power industrial and commercial plants. Units are compact and highly configurable, built to fit different types of plants so to meet the needs of highly qualified engineers.
Units are water chillers and heat pumps condensed in air with axial fans suitable for outdoor installation: the structure and panels are robust, made of galvanized and painted steel; all fasteners are made of stainless steel or galvanized steel, the frame containing the electrical equipment and all the components exposed to weather have a minimum **IP54** degree of protection.
This series is composed of seven models divided in 6 sizes with nominal cooling capacity **from 351 to 625 kW** and thermal capacity **from 370 to 658 kW.**
The units product cold water from **5 to 25°C** (in summer) and hot water from **30 to 55°C** (in winter) and as optional they are equipped with continuous adjustment of axial fans rotating speed in order to allow the units to operate both with low outdoor temperature in cooling mode and with high outdoor temperature in heating mode as well as to reduce noise emissions.
All the units are equipped with 5/6 scroll compressors arranged in tandem/trio on 2 circuits operating with environmental friendly **R410A** gas, brazed plate heat exchanger completely insulated and protected by water side with a differential pressure control and with an antifreeze electrical heater, electronic expansion valve, coil heat exchanger made of louver aluminum fins and copper tubes, axial fans with profiled blades to contain noise and with thermal protection built-in, on-board electrical control panel equipped with control system to manage the main functions.
Hydronic group (MP) composed of fittings and connections is available as an accessory with 1 or 2 pumps and also with high available head pumps; the accessory Water Storage Tank (SAA) is completely insulated and available on delivery side or for primary-secondary hydraulic circuit (Victaulic connections already in place) depending on the kind of plants to serve.
A variety of other accessories are available to extend the capabilities of the units.
During the design of the units particular attention has been given to achieve high system efficiency, to reduce overall energy consumptions and sound levels in order to meet the increasingly restrictive laws in terms of noise. Upon request, you can choose for a Standard Unit (AB) a Low Noise Unit (AS) which provides sound attenuation thanks to sound absorbing insulation in compressors area, sound jackets on compressors, a head pressure control to reduce axial fans speed or an Extra Low Noise Unit (AX), which provides in addition slower axial fans, more powerful finned coils and activation logic of the compressors in saturation.
All units are accurately build in compliance with the existing standards and are individually tested in factory. Only electrical and hydraulic connections are required for installation.

General specifications

- This manual and the wiring diagram supplied with the unit must be kept in a dry place and ready to hand for future consultation when required.
- This manual has been compiled to ensure that the unit is installed in the correct way and to supply comprehensive information about how to correctly use and service the appliance. **Before proceeding with the installation phase, please carefully read all the information in this manual, which describes the procedures required to correctly install and use the unit.**
- Strictly comply with the instructions in this manual and conform to the current safety standards.
- The appliance must be installed in accordance with the laws in force in the country in which the unit is installed.
- Unauthorized tampering with the electrical and mechanical equipment will **VOID THE WARRANTY.**
- Check the electrical specifications on the identification plate before making the electrical connections. Read the instructions in the specific section where the electrical connections are described.
- If the unit must be repaired for any reason, this must only be done by a specialized assistance center recognized by the manufacturer and using geuine spare parts.
- The manufacturer also declines all liability for any damage to persons or property deriving from failure of the information in this manual to correspond to the actual machine in your possession.
- **Proper uses: this series of chillers is designed to produce cold or hot water for use in hydronic systems for conditioning/heating purposes. The units are not suitable for the production of domestic hot water.**
  Any use differing from this proper use or beyond the operating limits indicated in this manual is forbidden unless previously agreed with the manufacturer.
- **The prevention of the risk of fire at the installation site is the responsiblity of the end user.**

European Directives

The company hereby declares that the machine in question complies with the matters prescribed by the following Directives:

- Machinery directive **2006/42/EC**
- Pressurised equipment directive (PED) **97/23/EC**
- Electromagnetic compatibility directive (EMC) **2004/108/EC**
- Low voltage directive (LVD) **2006/95/EC**

Any other Directives have to be considered not applicable.

GENERAL SPECIFICATIONS

Identification plate of the Unit

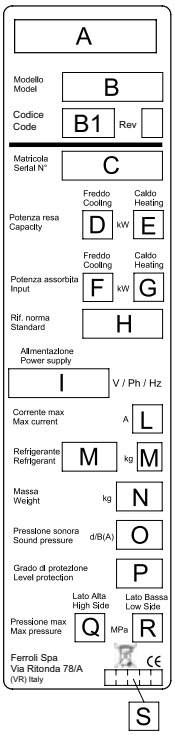

The figure on the left depicts the identification plate of the unit, affixed to the outer left-hand side of the Electric Panel.
A description of the data is given below:

Standard versions

A - Trademark
B - Model
B1- Code
C - Serial number
D - Cooling Capacity
E - Heating Capacity

F - Power input in COOLING mode
G - Power input in HEATING mode
H - Reference standard
I - Electric power supply
L - Maximum load current
M - Type of refrigerant and charge
N - Shipping weight of the unit
O - Sound pressure level at 1m
P - IP Level Protection
Q - Maximum pressure - High Side
R - Maximum pressure - Low Side
S - PED certification authority

Special versions

A - Trademark
B - Model
B1- Code
C - Serial number
D - Cooling Capacity (same as Standard Version of the unit)
E - Heating Capacity
for IR unit, VD version, Recovered Heating Capacity
for IP unit, VD version, Heating Capacity / Recovered Heating Capacity
F - Power input in COOLING mode (same as Standard version of the unit)
G - Power input in HEATING mode
H - Reference standard
I - Electric power supply
L - Maximum load current
M - Type of refrigerant and charge
N - Shipping weight of the unit
O - Sound pressure level at 1m
P - IP Level Protection
Q - Maximum pressure - High Side
R - Maximum pressure - Low Side
S - PED certification authority

NOTE: The identification plate of the Brine Unit (BR - BP) is filled out as shown in the diagram for the Basic Version of the unit (VB).

Identification code of the unit

The codes that identify the units are listed below and include the sequences of letters that determine the meanings for the various versions and set-ups.

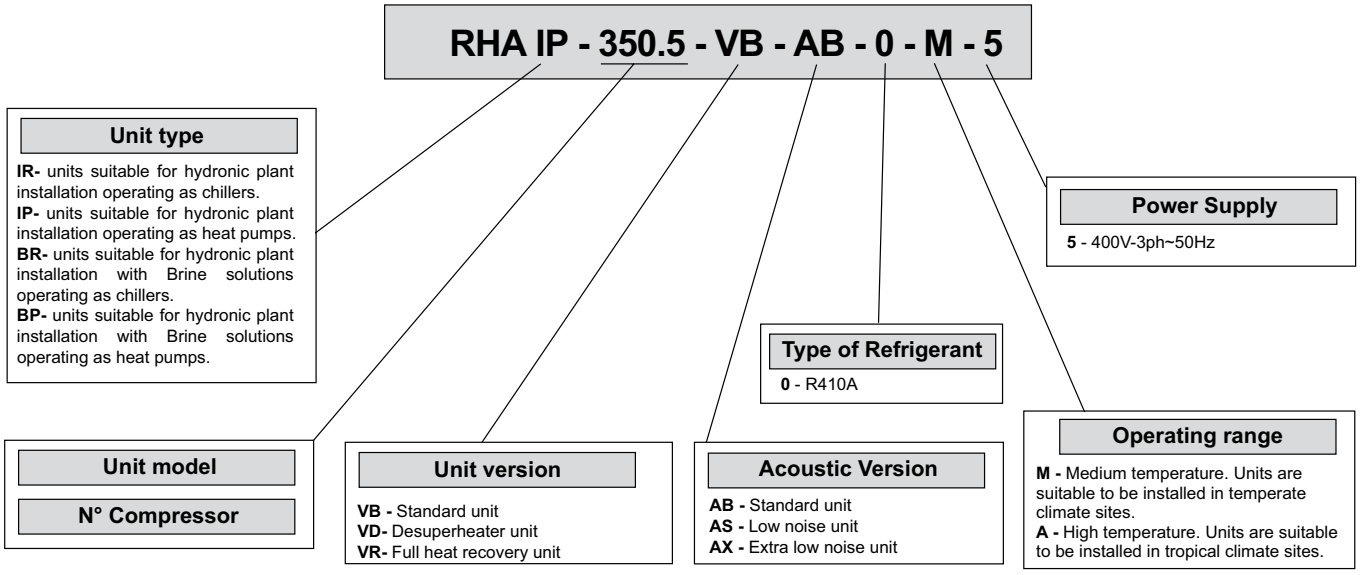

The available special versions are described below:

VB: Standard unit.

VD: Version with Desuperheater (available forboth IR units and IP units)

Produces cold water in the same way as the standard version plus hot water from 30 to 70°C at the same time. This is achieved by installing a water-refrigerant gas heat exchanger between the compressor and coils in order to recover 20 to 25% of the heating capacity that would otherwise be dispersed in the air.

It helps to remind that hot water production is possible only in combination with cold-hot water production in the main heat exchanger and it is subordinated by it.

VR: Total Heat Recovery version

Produces cold water as in the standard version plus hot water at a temperature of 35 to 55°C at the same time. This is achieved thanks to a water-refrigerant gas heat exchanger that totally recovers the heating capacity that would otherwise be dispersed in the air. The total heat recovery function is enabled and disabled by means of a valve on the compressor delivery of each circuit: when the temperature of the water that enters the recuperator drops, the valve switches the hot gas flow from the condensing coils to the recovery heat exchanger. On the other hand, when the temperature of the water reaches the set-point, the valve shuts off the heat recuperator and switches the hot gas flow to the condensing coils.

It helps to remind that hot water production is possible only in combination with cold water production in the main heat exchanger and it is subordinated by it.

GENERAL SPECIFICATIONS

Description of the components

1. Fans. These are the helical type with scythe-shaped blades to increase the efficiency and reduce the noise level. The fans are directly coupled to the single-phase motor by means of an external rotor. Thermal protection against operating faults is installed inside the winding. As standard they are equipped with continuous adjustment of axial fans rotating speed in order to allow the units to operate both with low outdoor temperature in cooling mode and with high outdoor temperature in heating mode.

2. Electric control and monitoring panel.

It is housed in a cabinet made of adequately thick painted sheet metal suitable for outdoor installation (protection degree IP 54). The panel comprises the following main components:

- Main door-locking circuit-breaker.
- Fuse holders with protection fuses for each compressor.
- Fuse holders with protection fuses for the antifreeze heater.
- Fuse holders and protection fuses for the fans (accessories).
- Fan control contactors.
- Insulating and safety transformer to power the auxiliaries, protected with fuses.
- Basic monitoring board with microprocessor

Control system main functions:

temperature control of the water produced by the unit, compressor and pump operating hour counter, timing and cycling of start-ups, input parameters by keyboard, alarms management, smart defrosting control and operating mode change (only IP unit), dynamic set-point (climatic control), scheduling and integrative heaters control ATC. If you installed the hydronic kit these functions are enabled: antifreeze with pump, start-up cycle after prolonged inactivity (anti-sticking), if the hydronic kit installed has 2 pumps there is a cycling between each pump to ensure an equivalent lifetime.

Digital input functions: low pressure, high pressure, high temperature on compressor supply, phase presence and sequence monitoring device on power supply, differential water pressure control, compressors thermal protection, fans thermal protection, pumps thermal protection (only if installed MP accessory), remote ON/OFF and remote operating mode change E/I (only IP unit), demand limit, double Set-point.

Digital output functions: compressor start-up, pump start-up (only with MP accessory), plate heat exchanger electrical heater, remote general alarm, 4-way valve (only IP unit), additional heating management, available digital contact on compressors running.

Analogic input functions: in and out water temperature, coil temperature probe, external air temperature probe.

Analogic output functions: continuous adjustment of axial fans rotating speed (if installed).

Moreover the controller allows:

- Alarm history (max 50m alarms managed with FIFO logic)
- Time scheduling (daily and weekly)
- Precise control of the water leaving temperature
- ATC (Advanced Temperature Control) prevention of the block of the unit: In case of critical conditions the machine does not stop but is able to regulate itself and provide the maximum power that can be generated in those conditions with the compressors working inside the admissible limits.
- Demand Limit by Digital Input and/or by Analog Input (4-20mA)
- Double Set Point by Digital Input
- Connection to BMS (supervision systems) through serial port RS 485 and MODBUS protocol

3. User interfacing terminal with display.

Control panel: composed of the instrument's front panel, equipped with an LCD display, three indicator LEDs, and one joystick buttons and three function button, it enables viewing and/or checking the operating mode and parameters, resources and complete alarm diagnostics.

In particular, it enables:

· Managing alarm situations

· Checking the status of resources.

KEY

1.Display

2. Alarms LED

3. LED for communication between the motherboard governing the unit and the keypad

4. Power supply LED

5. Joystick Menu Button

6. Function Button

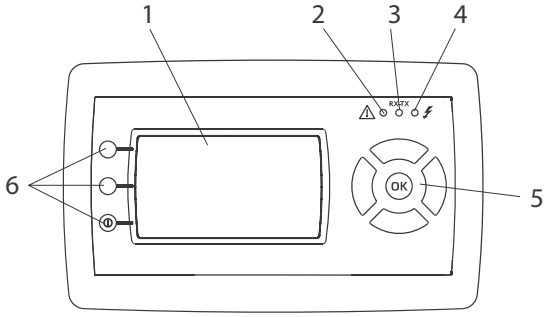

4. Compressors. They are the SCROLL type with orbiting coil equipped with built-in thermal protection and oil heater. The version unit AS and AX includes: a soundproofing jacket for the compressors, acoustic cladding for the entire compressor compartment to reduce the noise level and continuous adjustment of axial fans rotating speed. All units are equipped with five/six compressors connected in parallel (2 cooling circuits) which can operate at the same time (100% cooling power) or individually (17-33-50-67-83-100% of the cooling power), thus adapting to the different thermal loads of the system supplied.

5. Frame structure made of galvanized sheet metal panels coated with polyurethane powder paint to ensure maximun protection against adverse weather conditions.

6. Evaporator made of brazed stainless steel plates (AISI 316). It is installed in a shell of heat-insulating material to prevent the formation of condensation and heat exchanges towards the outside. Standard supply also includes antifreeze heater a differential pressure switch on the water circuit to avoid the risk of freezing if the water flow is shut off for some reason.

7. Condensing coils, the aluminium finned pack type with shaped profile to increase the heat exchange coefficient and with copper pipes arranged in staggered rows. A sub-cooling section is integrated into the lower part.
8. Covering panels, made of galvanized sheet metal coated with polyurethane powder paint to ensure maximun protection against adverse weather conditions
9.One-way valves (IP unit only), allowing the coolant to pass into the appropriate exchangers, depending on the operating cycle.
10. 4-way cycle reversal valve (IP unit only), reverses the flow direction of the gas as the summer/winter operating mode is changed.

Hydraulic and cooling circuit components (per circuit)
11. Safety valve. Installed on the delivery pipe of the compressors, this operates if extreme faults should occur in the plant.
12. Fluid tap. Ball type, this allows the gas flow on the fluid line to be turned on and off. Along with the tap on the compressor delivery, it allows the components of the fluid line to be subjected to extraordinary maintenance work and the compressors to be replaced if necessary (without discharging the coolant from the unit): pump down.
13. Compressor delivery tap. Ball type, allows the gas delivered to the compressors to be turned on and off.
14. Dehydrator filter. Mechanical cartridge type. Retains impurities and traces of moisture in the circuit.
15. Fluid and humidity indicator. Signals when fluid passes through the circuit, indicating that the coolant charge is correct. The fluid indicator light also indicates the amount of moisture in the coolant by changing colour.
16. Low pressure switch. With fixed setting. It is installed on the suction pipe and blocks the compressors if the operating pressures drop below the tolerated values. Automatically resets as the pressure increases. If it activates frequently, the unit will block and can only be restarted by resetting via the user interface terminal.
17. High pressure switch (n°3). With fixed setting. Are is installed on the delivery pipe and blocks the compressors if the operating pressures exceed the tolerated values. If it activates, the unit will block and can only be restarted by resetting via the user interface terminal.
18. Electronic expansion valve. This supplies the evaporator correctly, keeping the selected superheating degree at a steady level.
19. Pressure taps: 1/4 " SAE (7/16" UNF) type with flow regulator. Allow the operating pressure of the system to be measured: compressor delivery, lamination component inlet, compressor intake.
20. Pressure taps: 5/16 " SAE type with flow regulator. Allow the charge/discharge of the gas from the system, precisely from compressor outlet an expansion valve inlet.
21. Electrical heating elements to heat the compressor oil. "Belt" type. These activate when the compressor turns off and keep the temperature of the oil sufficiently high so as to prevent coolant from migrating during these pauses.
22. Fluid receiver (IP unit only), this is a plenum tank that accounts for variations to the coolant charge the machine must supply as the summer/winter operating mode varies.
23. Fluid separator (IP unit only), on the compressor intake to protect against possible fluid back-flows.
24. Water differential pressure switch. This is standard supply and is installed on the connections between the water inlet and outlet of the exchanger. It stops the unit if it activates.

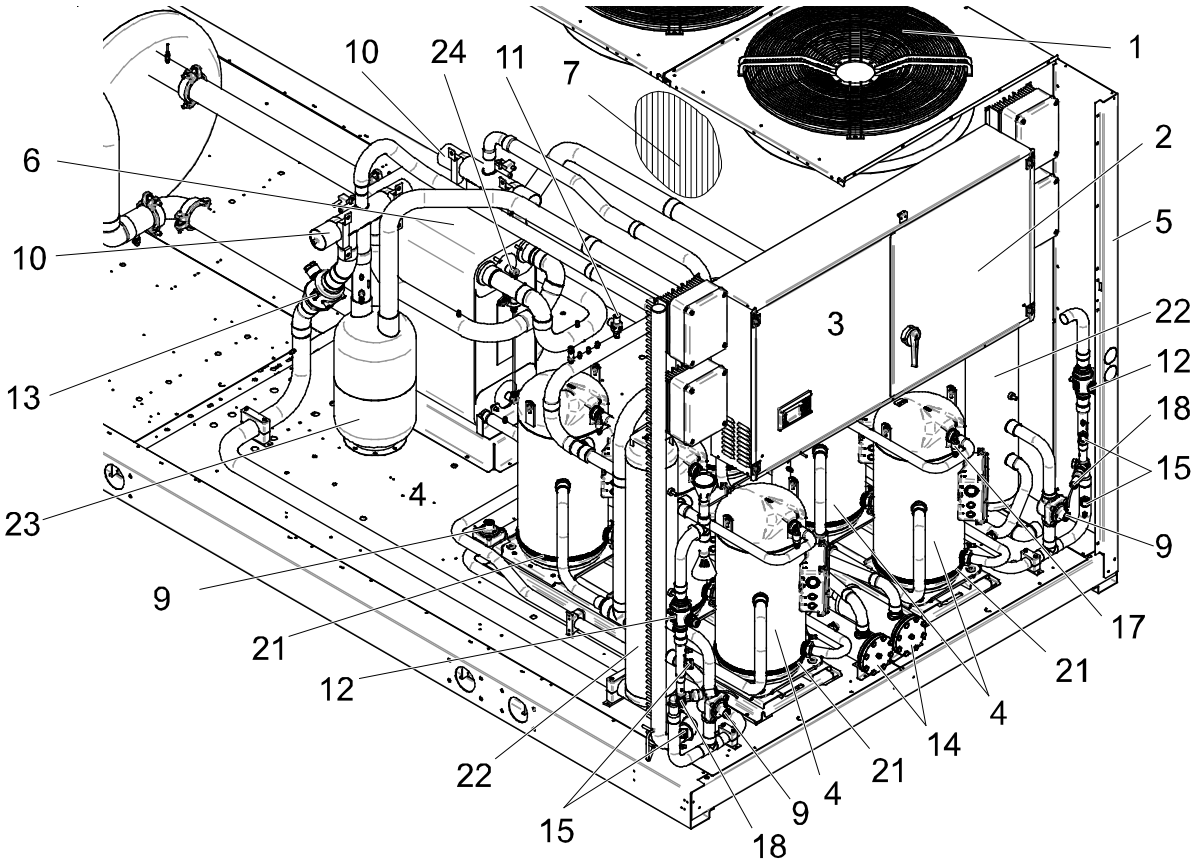

Version with Desuperheater VD (available for both IR units and IP units)

Hydraulic and chilling circuit components:

1. Desuperheater. Specially designed for the specific version. Plate type, made of stainless steel (AISI 316).
It is installed within a shell of thermal barrier insulating material to prevent heat exchanges towards the outside. Standard supply also includes an electric antifreeze heater to prevent the parts from freezing during the winter, when the system remains at a standstill (if not drained).
2. Water safety valve. On the heat recovery inlet pipe. It acts whenever faulty service leads to an operating pressure in the plumbing system that exceeds the valve opening value (Fig.1).
3. Water drain cock for emptying the exchangers and pipes of the machine dedicated to heat recovery (Fig. 1).
4. Air vent. Accessed by removing the front panels. It consists of a manually operated valve installed in the highest part of the water pipes. To use in conjunction with the water drain cocks situated in the rear part of the unit, for emptying the exchangers and pipes dedicated to heat recovery.

ACCESSORIES AND OPTIONAL EQUIPMENT

Mechanical accessories

NOTE: The accessories can be of the following type:
(M): only installed in the factory.
(F): supplied for installation by the customer.

MP. Hydronic Kit (M). Consists of:

1 On-off ball valves. Turn components such as the water filter, surge chamber and pump on and off when they require routine or extraordinary maintenance.
2 Metal gauze water filter. Can be turned on and off and inspected. It is installed on the pump delivery side. Prevents machining residues (dust, swarf, etc.) in the water pipes from entering the plate-type heat exchanger.
3 Hydraulic pump. Circulates water around the system. The pumps have a low/high head and suit the majority of installation requirements. The pumps are safeguarded by a magnetothermics installed in the chiller's electric panel.
4 Surge chamber. This is a closed, diaphragm type chamber. It absorbs the variations in the volumes of water in the system caused by temperature variations.
5 Water filling. Manual function with control positioned on the side of the unit opposite the electric panel and turned on and off by a cock that can be accessed by removing the rear panel.
6 Water pressure gauge. Connected to the water fill pipe. Displays the pressure of the water in the system.
7 Water safety valve.
8 Water outlet.
9 Air vent.
10 Antifreeze heater connection (RAG accessory).

To ensure a continuous operation, an anti-freeze with pump function (based on a reading from the output water probe) and starting cyclic (anti-sticking) after prolonged inactivity are enabled; if the hydronic kit has 2 pumps, the second, mounted in parallel to the first, can be activated in case of failure of the first and will also include a cycling period to guarantee to each pump an equivalent operating time.

MP. Hydronic Kit.

MP : Hydronic Kit with 1 (M1P) o 2 (M2P) Pumps: (The second pump, mounted in parallel to the first, allows to have a spare pump to be activated in case of failure of the first). Besides the pumps, this accessory is equipped with all the hydraulic components (water filter, expansion tank, on-off valves, water pressure gauge, air vent, water outlet) required for complete installation and easy maintenance.
Different water accumulation tank configurations are therefore available in combination with the Hydronic Kit accessory:

MP AM 2P STD: Accumulation on the Plant Delivery side (Standard)(A): The pump draws water from the system, sends it to the plate exchanger and from thence to the inertial accumulation tank. During normal operating conditions, the pump in this configuration is able to provide a residue head from 86 to 150 kPa (from 9 to 15 m.w.c.) for the circulating water.

MP AM 2P HP1: Accumulation on the Plant Delivery side (High)(B).: The pump draws water from the system, sends it to the plate exchanger and from thence to the inertial accumulation tank. During normal operating conditions, the pump in this configuration is able to provide a residue head from 198 to 255 kPa (from 20 to 25 m.w.c.) for the circulating water.

MP PS 2P STD: Accumulation pre-engineered for the primary and secondary circuit : The sole function of the pump is to circulate the water around the primary circuit: this circuit includes the accumulation tank and plate exchanger (chiller water circuit). The installer must mount the pumping section relative to the secondary circuit formed by the accumulation tank (with the pre-engineered wet connections) and the system served. No high working head version available.

MP SS 2P STD: Hydronic Kit without Water Storage Tank (Standard) (A). The pump draws water from the system, sends it to the plate heat exchanger and returns it to the system. During normal operating conditions, the pump in this configurations can provide a residue head from 86 to 150 kPa (from 9 to 15 m w.c.).

MP SS 2P HP1: Hydronic Kit without Water Storage Tank (High Working Head) (B). The pump draws water from the system, sends it to the plate heat exchanger and returns it to the system. During normal operating conditions, the pump in this configurations can provide a residue head from 198 to 255 kPa (from 20 to 25 m w.c.).

Notes:
(A): For the working head values depending on the water flow rate, consult the Standard Working Head MP AM STD graph.
(B): For the working head values depending on the water flow rate, consult the High Working Head MP AM HP1 graph.

SAA- Water Storage tank (M). Painted steel water storage tank reduces compressor startup frequency and temperature fluctuation on water side. It is coated with thermo insulated material to avoid air condensing and losses due to heat transfer. It is available on delivery side and also for primary-secondary hydraulic circuit interface.

Water storage tank. It consists of:

Water draining. On-off action by means of a cock that can be accessed by removing the rear panel, positioned on the side of the unit opposite to the electric panel.
Air vent. Accessed by removing the rear panel positioned on the side of the unit opposite to the electric panel. It consists of a manually operated valve installed on the highest part of the wet pipes.
Antifreeze heater connection. 1"1/4 female threaded connection pre-engineered for installation of the antifreeze heater (RAG accessory).
Water safety valve, on the rear part of the tank. It acts whenever faulty service leads to an operating pressure in the hydraulic circuit that exceeds the valve opening value.

KT - the following kits are available (this accessory is mandatory if the Hydronic Kit is not installed).

- Victaulic connection kit. This accessory consists of steel pipes insulated with thermal barrier material and allows the water inlet/outlet to be connected straight inside the unit.
- Complete pipe kit. This accessory consists of steel pipes insulated with thermal barrier material and allows the water inlet/outlet connection to be routed to the machine.
- Water storage tank pipe kit. This accessory consists of steel pipes insulated with thermal barrier material and allows the water inlet/outlet connection to be routed to the machine.

NB: YOU CAN CHOOSE ONLY ONE KIT.

GP- Coil protection grid (M). Protects external surface of the finned coils.

GM- Pressure gauges kit (M). 4 pressure gauges allow visualization of high and low refrigerant gas pressure.

AVG- Rubber vibration dampers (F). Reduce vibrations transmitted to the floor by compressors and fans during normal operating conditions (until 85%).

AVM- Spring vibration dampers (F). Reduce vibrations transmitted to the floor by compressors and fans during normal operating conditions (until 90%).

ACCESSORIES AND OPTIONAL EQUIPMENT

VICTAULIC CONNECTION KIT

COMPLETE PIPE KIT

WATER STORAGE TANK PIPE KIT

M1P AM 2P STD

M1P AM 2P HP1

M1P PS 2P STD

M2P AM 2P STD

M2P AM 2P HP1

M2P PS 2P STD

M1P SS 2P STD

M1P SS 2P HP1

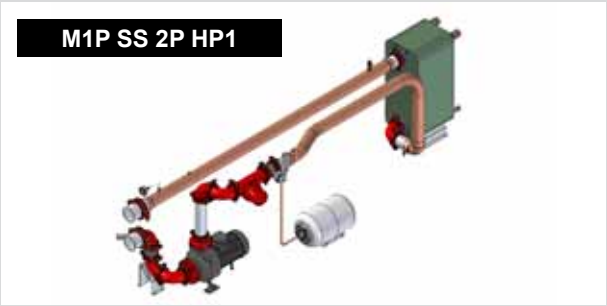

M2P SS 2P STD

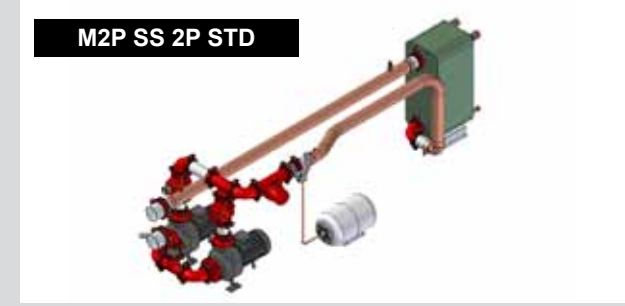

M2P SS 2P HP1

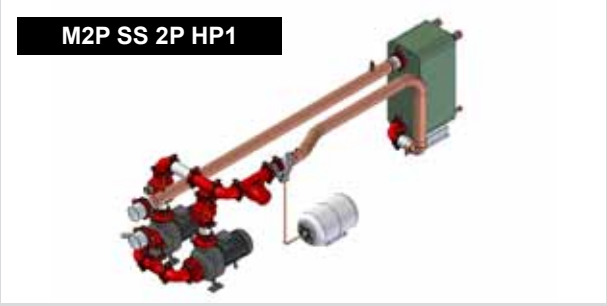

ACCESSORIES AND OPTIONAL EQUIPMENT

Electrical accessories

TP - Low and High pressure transducers (M). Allow the display of the suction and discharge pressures of compressors. Their presence activates an advanced defrost and condensation control logic and the ATC (Advanced Temperature Control) to prevent high pressure alarm due to high external air temperature.

RAG- Storage tank electrical heater (F). Keeps water in storage tank above freezing point to avoid risk of icing during winter stops it is activated together with plate heat exchanger electrical heater.

TAT- High Temperature Thermostat (M). Two thermostats in series on compressors outlet pipes preserve operation not allowing temperature to rise up than a specified non adjustable value.

CR- Remote control panel (F). Replies every control and visualization of the onboard control panel.

INT- Serial interface (M). Allows serial communication on RS485 by MODBUS protocol.

MTC - Magnetothermic switch (M). Magnetothermic switch on all loads place of fuses.

SS - Soft Starter (M). Soft starter on compressors allow to reduce to about a 60% nominal inrush current.

FLS - Flow switch (F). Paddle flow switch on the water circuit to avoid the risk of freezing if the water flow is shut off for some reason.

RIF - Capacitors for power factor corrections (M). Capacitors for power factor corrections increase power factor cos φ (> 0.91) and reduce power input.

CSF - Voltage monitor and sequence meter (M). The device enables control of the correct sequence of power phases and the lack of any phases.

KOP - Programmer clock (M). Allows the unit to be turned on and off depending on the programmed time setting (up to 14 switching actions can be programmed as required throughout the 7 days of the week).

DCC - Head pressure control (M). (as standard for Low Noise unit AS and for eXtra Low Noise unit AX).
The device is made by 2 electrical drivers that, by means of phase cutting, control the fans speed rotation, with the scope of mantaining the condensation pressure inside the correct operating limits.

Mechanical options

Special finned heat exchangers
- Coils with copper fins
- Coils with tin-coated copper fins
- Coils with aluminium fins with acrylic, epoxy or hydrofilic coating.

Electrical options

Other power source voltage rating (contact our technical department).

GENERAL TECHNICAL SPECIFICATION

General technical specifications

MODELS	350.5	390.6	440.6	490.6	560.6	630.6	UM
Power supply	400-3-50						V-ph-Hz
Refrigerant type	R410A						-
Refrigeration circuits	2						N°
Compressor specifications							
Type	scroll						-
Quantity	5	6					N°
Oil charge CP1	6.8	6.8	6.8	6.3	6.3	6.3	l
Oil charge CP2	6.8	6.8	6.8	6.3	6.3	6.3	l
Oil charge CP3	6.8	6.8	6.8	6.3	6.3	6.3	l
Oil charge CP4	6.3	6.8	6.3	6.3	6.3	6.3	l
Oil charge CP5	6.3	6.8	6.3	6.3	6.3	6.3	l
Oil charge CP6	-	6.8	6.3	6.3	6.3	6.3	l
Load steps	0 / 20 / 40 / 60 / 80 / 100	0 / 16.7 / 33.3 / 50 / 66.7 / 83.3 / 100					%
Heat Exchanger							
Type	Brazed plates						-
Quantity	1						N°
Total water capacity	27.5	27.5	34.7	34.7	53.6	53.6	l
Coils specifications							
Type	Aluminum fins and copper tubes						-
Quantity	2						N°
Total area	9.28	9.28	9.28	9.28	11.14	11.14	m^2
Fan specifications							
Type	Axial						-
Quantity	8	8	10	10	12	12	N°
Maximum rotation speed AB	900						rpm
Maximum rotation speed AS	750						rpm
Maximum rotation speed AX	600						rpm
Total air flow rate AB	165840	159520	207300	199400	248760	239280	m^3/h
Total air flow rate AS	138200	132933	172750	166167	207300	199400	m^3/h
Total air flow rate AX	110560	106347	138200	132933	165840	159520	m^3/h
Power input	14.4	14.4	18.0	18.0	21.6	21.6	kW
Water Storage Tank (SAA accessory)							
Water volume	700						l
Surge chamber volume	24						l
Safety valve setting	600						kPa
Surge chamber default pressure	150						kPa
Max. operating pressure	800						kPa

Electrical specifications

Units without pumping module

MODELS	350.5	390.6	440.6	490.6	560.6	630.6	UM
Total maximum load current [FLA]	233	302	355	399	451	494	A
Total maximum power input [FLI]	139	182	211	237	272	304	kW
Total maximum starting current [MIC]	422	529	605	649	771	815	A
Units with pumping module MP PS STD (1 or 2 pumps)							
Total maximum load current [FLA]	245	314	376	420	472	515	A
Total maximum power input [FLI]	146	189	224	250	285	317	kW
Total maximum starting current [MIC]	434	541	626	670	792	835	A
Units with pumping module MP AM STD and MP SS STD (1 or 2 pumps)							
Total maximum load current [FLA]	247	316	376	420	472	515	A
Total maximum power input [FLI]	147	190	224	250	285	317	kW
Total maximum starting current [MIC]	436	543	626	670	792	835	A
Units with pumping module MP AM HP1 and MP SS HP1 (1 or 2 pumps)							
Total maximum load current [FLA]	254	323	382	426	478	521	A
Total maximum power input [FLI]	152	195	227	253	288	320	kW
Total maximum starting current [MIC]	442	550	632	676	798	842	A

Data referred to standard operating condition.
(SAA): with storage tank

NOMINAL PERFORMANCES

Standard unit AB - MEDIUM TEMPERATURE PLANT

	MOD.	350.5	390.6	440.6	490.6	560.6	630.6	UM
IR	Cooling mode A35W7 (source: air 35°C d.b. / system: water in 12°C out 7°C)							
	Cooling capacity (E)	351	374	439	494	558	625	kW
	Compressor power input	105	114	131	151	168	191	kW
	Total power input	120	128	149	169	189	213	kW
	EER (E)	2.93	2.92	2.95	2.92	2.95	2.93	-
	ESEER (E)	4.10	4.09	4.12	4.09	4.13	4.11	-
	Water flow rate	16.8	17.9	21.0	23.6	26.7	29.9	l/s
	Water pressure drop (E)	47	54	48	60	45	56	kPa
IP	Cooling mode A35W7 (source: air 35°C d.b. / system: water in 12°C out 7°C)							
	Cooling capacity (E)	341	364	426	480	540	608	kW
	Compressor power input	104.0	112.0	130.0	149.0	166.0	189.0	kW
	Total power input	118.0	127.0	148.0	167.0	187.0	211.0	kW
	EER (E)	2.89	2.87	2.88	2.87	2.89	2.88	-
	ESEER (E)	4.05	4.01	4.03	4.02	4.04	4.03	-
	Water flow rate	16.3	17.4	20.4	22.9	25.8	29.0	l/s
	Water pressure drop (E)	45	51	45	57	42	53	kPa
	Heating mode A7W45 (source: air 7°C d.b. 6°C w.b. / system: water in 40°C out 45°C)							
	Heating capacity (E)	370	393	456	516	576	658	kW
	Compressor power input	106.0	114.0	130.0	151.0	166.0	195.0	kW
	Total power input	120.0	128.0	148.0	169.0	188.0	217	kW
	COP (E)	3.08	3.07	3.08	3.05	3.06	3.03	-
	Water flow rate	17.7	18.8	21.8	24.7	27.5	31.4	l/s
	Water pressure drop (E)	53	59	51	66	48	62	kPa
	Heating mode A2W45 (source: air 2°C d.b. 1°C w.b. / system: water in 40°C out 45°C)							
	Heating capacity	337	358	415	470	524	599	kW
	Compressor power input	104.4	112.3	128.1	148.7	163.5	192.1	kW
	Total power input	118.8	126.7	146.1	166.7	185.1	213.7	kW
	COP	2.84	2.83	2.84	2.82	2.83	2.80	-
	Water flow rate	16.1	17.1	19.8	22.4	25.0	28.6	l/s
	Water pressure drop	43	49	42	54	39	51	kPa

(E): Data declared according to **EUROVENT LCP** certification programme. The values are for units without options and accessories.

Standard unit AB - LOW TEMPERATURE PLANT

	MOD.	350.5	390.6	440.6	490.6	560.6	630.6	UM
IR	Cooling mode A35W18 (source: air 35°C d.b. / system: water in 23°C out 18°C)							
	Cooling capacity	449	479	562	632	714	800	kW
	Compressor power input	111.3	120.8	138.9	160.1	178.1	202.5	kW
	Total power input	125.7	135.2	156.9	178.1	199.7	224	kW
	EER	3.57	3.54	3.58	3.55	3.58	3.57	-
	Water flow rate	21.5	22.9	26.8	30.2	34.1	38.2	l/s
	Water pressure drop	77	88	78	98	73	91	kPa
IP	Cooling mode A35W18 (source: air 35°C d.b. / system: water in 23°C out 18°C)							
	Cooling capacity	436	466	545	614	691	778	kW
	Compressor power input	110.2	118.7	137.8	157.9	176.0	200.3	kW
	Total power input	124.6	133.1	155.8	175.9	197.6	222	kW
	EER	3.50	3.50	3.50	3.49	3.50	3.50	-
	Water flow rate	20.9	22.3	26.1	29.4	33.0	37.2	l/s
	Water pressure drop	73	83	74	93	68	87	kPa
	Heating mode A7W35 (source: air 7°C d.b. 6°C w.b. / system: water in 30°C out 35°C)							
	Heating capacity	392	417	483	547	611	697	kW
	Compressor power input	90.1	96.9	110.5	128.4	141.1	165.8	kW
	Total power input	104.5	111.3	128.5	146.4	162.7	187.4	kW
	COP	3.75	3.75	3.76	3.74	3.76	3.72	-
	Water flow rate	18.7	19.9	23.1	26.1	29.2	33.3	l/s
	Water pressure drop	59	66	58	73	54	70	kPa
	Heating mode A2W35 (source: air 2°C d.b. 1°C w.b. / system: water in 30°C out 35°C)							
	Heating capacity	350	372	432	488	545	623	kW
	Compressor power input	85.1	91.5	104.4	121.2	133.3	156.5	kW
	Total power input	99.5	105.9	122.4	139.2	154.9	178.1	kW
	COP	3.52	3.51	3.53	3.51	3.52	3.50	-
	Water flow rate	16.7	17.8	20.6	23.3	26.0	29.8	l/s
	Water pressure drop	47	53	46	59	43	56	kPa

NOMINAL PERFORMANCES

Low noise unit AS - MEDIUM TEMPERATURE PLANT

	MODELLO	350.5	390.6	440.6	490.6	560.6	630.6	UM
IR	Cooling mode A35W7 (source: air 35°C d.b. / system: water in 12°C out 7°C)							
	Cooling capacity (E)	337	359	421	474	536	600	kW
	Compressor power input	113.0	123.0	141.0	163.0	181.0	206.0	kW
	Total power input	127.0	137.0	159.0	181.0	203.0	228	kW
	EER (E)	2.65	2.62	2.65	2.62	2.64	2.63	-
	ESEER (E)	3.71	3.67	3.71	3.67	3.70	3.68	-
	Water flow rate	16.10	17.20	20.10	22.6	25.6	28.7	l/s
	Water pressure drop (E)	43	50	44	55	41	52	kPa
IP	Cooling mode A35W7 (source: air 35°C d.b. / system: water in 12°C out 7°C)							
	Cooling capacity (E)	327	349	409	461	518	584	kW
	Compressor power input	112.0	121.0	140.0	161.0	179.0	204.0	kW
	Total power input	126.0	135.0	158.0	179.0	201.0	226	kW
	EER (E)	2.60	2.59	2.59	2.58	2.58	2.58	-
	ESEER (E)	3.63	3.62	3.62	3.61	3.61	3.62	-
	Water flow rate	15.60	16.70	19.50	22.00	24.7	27.9	l/s
	Water pressure drop (E)	41	47	41	52	38	49	kPa
	Heating mode A7W45 (source: air 7°C d.b. 6°C w.b. / system: water in 40°C out 45°C)							
	Heating capacity (E)	355	377	438	495	553	632	kW
	Compressor power input	101.0	108.0	124.0	143.0	158.0	185.0	kW
	Total power input	115.0	122.0	142.0	161.0	180.0	207.0	kW
	COP (E)	3.09	3.09	3.08	3.07	3.07	3.05	-
	Water flow rate	17.00	18.00	20.9	23.7	26.4	30.2	l/s
	Water pressure drop (E)	48	54	47	61	44	57	kPa
	Heating mode A2W45 (source: air 2°C d.b. 1°C w.b. / system: water in 40°C out 45°C)							
	Heating capacity	323	343	399	450	503	575	kW
	Compressor power input	99.5	106.4	122.1	140.9	155.6	182.2	kW
	Total power input	113.9	120.8	140.1	158.9	177.2	203.8	kW
	COP	2.84	2.84	2.85	2.83	2.84	2.82	-
	Water flow rate	15.43	16.39	19.04	21.52	24.0	27.5	l/s
	Water pressure drop	40	45	39	50	36	47	kPa

(E): Data declared according to **EUROVENT LCP** certification programme. The values are for units without options and accessories.

Low noise unit AS - LOW TEMPERATURE PLANT

	MODELLO	350.5	390.6	440.6	490.6	560.6	630.6	UM
IR	Cooling mode A35W18 (source: air 35°C d.b. / system: water in 23°C out 18°C)							
	Cooling capacity	431	460	539	607	686	768	kW
	Compressor power input	119.8	130.4	149.5	172.8	191.9	218	kW
	Total power input	134.2	144.8	167.5	190.8	213.5	240	kW
	EER	3.21	3.18	3.22	3.18	3.21	3.20	-
	Water flow rate	20.61	22.0	25.7	29.0	32.8	36.7	l/s
	Water pressure drop	71	81	71	91	68	84	kPa
IP	Cooling mode A35W18 (source: air 35°C d.b. / system: water in 23°C out 18°C)							
	Cooling capacity	419	447	524	590	663	748	kW
	Compressor power input	118.7	128.3	148.4	170.7	189.7	216	kW
	Total power input	133.1	142.7	166.4	188.7	211.3	238	kW
	EER	3.15	3.13	3.15	3.13	3.14	3.14	-
	Water flow rate	20.00	21.3	25.0	28.2	31.7	35.7	l/s
	Water pressure drop	67	76	67	86	63	80	kPa
	Heating mode A7W35 (source: air 7°C d.b. 6°C w.b. / system: water in 30°C out 35°C)							
	Heating capacity	376	400	464	525	586	670	kW
	Compressor power input	85.9	91.8	105.4	121.6	134.3	157.3	kW
	Total power input	100.3	106.2	123.4	139.6	155.9	178.9	kW
	COP	3.75	3.77	3.76	3.76	3.76	3.75	-
	Water flow rate	17.98	19.09	22.2	25.1	28.0	32.0	l/s
	Water pressure drop	54	61	53	68	49	64	kPa
	Heating mode A2W35 (source: air 2°C d.b. 1°C w.b. / system: water in 30°C out 35°C)							
	Heating capacity	336	357	415	468	523	598	kW
	Compressor power input	81.1	86.7	99.5	114.8	126.8	148.5	kW
	Total power input	95.5	101.1	117.5	132.8	148.4	170.1	kW
	COP	3.52	3.53	3.53	3.52	3.52	3.52	-
	Water flow rate	16.05	17.05	19.80	22.4	25.0	28.6	l/s
	Water pressure drop	43	49	42	54	39	51	kPa

NOMINAL PERFORMANCES

Extra low noise unit AX - MEDIUM TEMPERATURE PLANT

	MODELLO	350.5	390.6	440.6	490.6	560.6	630.6	UM
IR	Cooling mode A35W7 (source: air 35°C d.b. / system: water in 12°C out 7°C)							
	Cooling capacity (E)	330	352	413	464	525	588	kW
	Compressor power input	117.0	127.0	145.0	168.0	186.0	212.0	kW
	Total power input	131.0	141.0	163.0	186.0	208.0	234	kW
	EER (E)	2.52	2.50	2.53	2.49	2.52	2.51	-
	ESEER (E)	3.53	3.50	3.55	3.49	3.53	3.52	-
	Water flow rate	15.80	16.80	19.70	22.2	25.1	28.1	l/s
	Water pressure drop (E)	42	47	42	53	40	49	kPa
IP	Cooling mode A35W7 (source: air 35°C d.b. / system: water in 12°C out 7°C)							
	Cooling capacity (E)	321	342	400	451	508	572	kW
	Compressor power input	115.0	124.0	144.0	165.0	184.0	210.0	kW
	Total power input	129.0	138.0	162.0	183.0	206.0	232	kW
	EER (E)	2.49	2.48	2.47	2.46	2.47	2.47	-
	ESEER (E)	3.48	3.47	3.46	3.45	3.45	3.45	-
	Water flow rate	15.30	16.30	19.10	21.50	24.3	27.3	l/s
	Water pressure drop (E)	39	45	39	50	37	47	kPa
	Heating mode A7W45 (source: air 7°C d.b. 6°C w.b. / system: water in 40°C out 45°C)							
	Heating capacity (E)	352	373	433	490	547	625	kW
	Compressor power input	98.6	106.0	121.0	140.0	154.0	181.0	kW
	Total power input	113.0	120.0	139.0	158.0	176.0	203.0	kW
	COP (E)	3.12	3.11	3.12	3.10	3.11	3.08	-
	Water flow rate	16.80	17.80	20.70	23.4	26.1	29.9	l/s
	Water pressure drop (E)	47	53	46	59	43	56	kPa
	Heating mode A2W45 (source: air 2°C d.b. 1°C w.b. / system: water in 40°C out 45°C)							
	Heating capacity (E)	320	339	394	446	498	569	kW
	Compressor power input	97.1	104.4	119.2	137.9	151.7	178.3	kW
	Total power input	111.5	118.8	137.2	155.9	173.3	199.9	kW
	COP (E)	2.87	2.85	2.87	2.86	2.87	2.85	-
	Water flow rate	15.30	16.22	18.83	21.30	23.8	27.2	l/s
	Water pressure drop (E)	39	44	38	49	36	46	kPa

(E): Data declared according to **EUROVENT LCP** certification programme. The values are for units without options and accessories.

Extra low noise unit AX - LOW TEMPERATURE PLANT

	MODELLO	350.5	390.6	440.6	490.6	560.6	630.6	UM
IR	Cooling mode A35W18 (source: air 35°C d.b. / system: water in 23°C out 18°C)							
	Cooling capacity	422	451	529	594	672	753	kW
	Compressor power input	124.0	134.6	153.7	178.1	197.2	225	kW
	Total power input	138.4	149.0	171.7	196.1	219	246	kW
	EER	3.05	3.03	3.08	3.03	3.07	3.06	-
	Water flow rate	20.18	21.5	25.3	28.4	32.1	36.0	l/s
	Water pressure drop	68	77	69	87	65	81	kPa
IP	Cooling mode A35W18 (source: air 35°C d.b. / system: water in 23°C out 18°C)							
	Cooling capacity	411	438	512	577	650	732	kW
	Compressor power input	121.9	131.4	152.6	174.9	195.0	223	kW
	Total power input	136.3	145.8	170.6	192.9	217	244	kW
	EER	3.02	3.00	3.00	2.99	3.00	3.00	-
	Water flow rate	19.63	20.92	24.5	27.6	31.1	35.0	l/s
	Water pressure drop	65	73	65	82	61	77	kPa
	Heating mode A7W35 (source: air 7°C d.b. 6°C w.b. / system: water in 30°C out 35°C)							
	Heating capacity	373	395	459	519	580	663	kW
	Compressor power input	83.8	90.1	102.9	119.0	130.9	153.9	kW
	Total power input	98.2	104.5	120.9	137.0	152.5	175.5	kW
	COP	3.80	3.78	3.80	3.79	3.80	3.78	-
	Water flow rate	17.83	18.89	21.9	24.8	27.7	31.7	l/s
	Water pressure drop	53	60	52	66	48	63	kPa
	Heating mode A2W35 (source: air 2°C d.b. 1°C w.b. / system: water in 30°C out 35°C)							
	Heating capacity	333	353	410	464	518	592	kW
	Compressor power input	79.2	85.1	97.1	112.4	123.6	145.3	kW
	Total power input	93.6	99.5	115.1	130.4	145.2	166.9	kW
	COP	3.56	3.55	3.56	3.56	3.57	3.55	-
	Water flow rate	15.92	16.87	19.58	22.2	24.7	28.3	l/s
	Water pressure drop	42	48	41	53	38	50	kPa

STANDARD PERFORMANCES - IR COOLING UNIT ONLY

Performances - Standard unit AB

MOD.	TW	OUTDOOR AIR TEMPERATURE (°C D.B.)													
		20		25		30		35		40		45		50	
		kWf	kWa	kWf	kWa	kWf	kWa	kWf	kWa	kWf	kWa	kWf	kWa	kWf	kWa
350.5	5	401	73.7	374	84.8	354	93.4	332	103	309	113	286	124	263	134
	6	412	74.4	384	85.6	363	94.3	341	104	317	115	294	125	270	135
	7	424	75.1	396	86.4	374	95.2	**351**	**105**	327	116	302	126	278	136
	8	436	76.0	407	87.4	385	96.3	361	106	336	117	311	128	-	-
	9	448	76.7	418	88.3	395	97.3	371	107	345	118	320	129	-	-
	10	460	77.5	429	89.1	406	98.2	381	108	354	119	328	130	-	-
	11	471	78.2	440	90.0	416	99.2	390	109	363	121	336	131	-	-
	12	484	79.0	452	90.9	427	100	401	110	373	122	346	133	-	-
390.6	5	427	80.0	398	92.0	377	101	354	112	329	123	305	134	280	145
	6	439	80.7	410	92.9	387	102	363	113	338	124	313	136	288	147
	7	452	81.6	421	93.8	399	103	**374**	**114**	348	126	322	137	296	148
	8	464	82.5	433	94.9	410	105	385	115	358	127	331	139	-	-
	9	477	83.3	445	95.8	421	106	395	116	368	128	341	140	-	-
	10	490	84.1	457	96.8	432	107	406	118	377	130	350	141	-	-
	11	502	84.9	469	97.7	443	108	416	119	387	131	359	143	-	-
	12	516	85.8	482	98.7	455	109	427	120	398	132	368	144	-	-
440.6	5	501	91.9	468	106	442	117	415	128	386	142	358	154	329	167
	6	515	92.8	481	107	455	118	427	130	397	143	368	156	338	168
	7	530	93.7	495	108	468	119	**439**	**131**	408	144	378	157	347	170
	8	545	94.8	509	109	481	120	451	132	420	146	389	159	-	-
	9	560	95.7	523	110	494	121	464	134	432	147	400	161	-	-
	10	575	96.7	537	111	507	123	476	135	443	149	410	162	-	-
	11	590	97.6	550	112	520	124	488	136	454	150	421	164	-	-
	12	606	98.6	565	113	535	125	502	138	467	152	432	166	-	-
490.6	5	564	106	526	122	498	134	467	148	435	163	402	178	370	192
	6	579	107	541	123	511	136	480	149	447	165	414	180	380	194
	7	596	108	557	124	526	137	**494**	**151**	460	166	426	181	391	196
	8	613	109	572	126	541	138	508	153	473	168	438	183	-	-
	9	630	110	588	127	556	140	522	154	486	170	450	185	-	-
	10	647	111	604	128	571	141	536	156	499	172	462	187	-	-
	11	663	113	619	129	586	143	550	157	511	173	474	189	-	-
	12	681	114	636	131	601	144	564	159	525	175	486	191	-	-
560.6	5	637	118	595	136	562	149	528	165	491	182	455	198	418	214
	6	655	119	611	137	578	151	542	166	504	183	467	200	429	216
	7	674	120	629	138	595	152	**558**	**168**	519	185	481	202	442	218
	8	693	122	647	140	611	154	574	170	534	187	494	204	-	-
	9	712	123	664	141	628	156	590	172	549	189	508	206	-	-
	10	731	124	682	143	645	157	605	173	563	191	522	208	-	-
	11	749	125	699	144	661	159	621	175	578	193	535	210	-	-
	12	770	126	718	145	679	160	638	177	593	195	549	212	-	-
630.6	5	713	134	666	154	630	170	591	187	550	206	509	225	468	243
	6	733	135	684	156	647	171	607	189	565	208	523	227	481	246
	7	755	137	704	157	666	173	**625**	**191**	581	211	539	230	495	248
	8	776	138	724	159	685	175	643	193	598	213	554	232	-	-
	9	797	140	744	161	704	177	660	195	614	215	569	234	-	-
	10	818	141	764	162	722	179	678	197	631	217	584	237	-	-
	11	839	142	783	164	741	180	695	199	647	219	599	239	-	-
	12	862	144	805	165	761	182	714	201	664	221	615	241	-	-

Tw= Outlet water temperature °C **kWf** = Cooling capacity (kW). **kWa** = Compressor power input (kW)

The standard performances refer to a 5°C temperature difference between the water entering and leaving the heat exchanger and to operation of the unit with all fans at nominal or maximum speed. A 0.44 x 10^{-4} m^2 K/W fouling factor has also been considered with the unit installed at zero meters above sea level (Pb = 1013mbar).

STANDARD PERFORMANCES - IR COOLING UNIT ONLY

Performances - Low noise unit AS

MOD.	TW	OUTDOOR AIR TEMPERATURE (°C D.B.)													
		20		25		30		35		40		45		50	
		kWf	kWa	kWf	kWa	kWf	kWa	kWf	kWa	kWf	kWa	kWf	kWa	kWf	kWa
350.5	5	385	79.3	359	91.2	340	101	319	111	296	122	275	133	252	144
	6	395	80.0	369	92.1	349	101	327	112	305	123	282	134	259	145
	7	407	80.8	380	93.0	359	102	**337**	**113**	314	125	290	136	267	147
	8	418	81.7	391	94.0	369	104	347	114	322	126	299	137	-	-
	9	430	82.6	401	95.0	379	105	356	115	331	127	307	139	-	-
	10	441	83.4	412	95.9	390	106	366	117	340	128	315	140	-	-
	11	453	84.2	422	96.9	399	107	375	118	349	130	323	141	-	-
	12	465	85.0	434	97.8	410	108	385	119	358	131	332	143	-	-
390.6	5	410	86.3	382	99.3	362	109	339	121	316	133	292	145	269	157
	6	421	87.1	393	100	372	110	349	122	325	134	301	146	276	158
	7	433	88.0	405	101	383	112	**359**	**123**	334	136	309	148	284	160
	8	446	89.0	416	102	393	113	369	124	343	137	318	149	-	-
	9	458	89.9	427	103	404	114	379	126	353	138	327	151	-	-
	10	470	90.8	439	104	415	115	389	127	362	140	336	152	-	-
	11	482	91.6	450	105	426	116	399	128	372	141	344	154	-	-
	12	495	92.5	462	106	437	117	410	129	382	143	353	155	-	-
440.6	5	481	98.9	449	114	424	125	398	138	370	152	343	166	315	180
	6	494	99.9	461	115	436	127	409	140	381	154	353	168	324	181
	7	508	101	474	116	449	128	**421**	**141**	392	155	363	169	333	183
	8	523	102	488	117	461	129	433	143	403	157	373	171	-	-
	9	537	103	501	119	474	131	445	144	414	159	383	173	-	-
	10	551	104	515	120	487	132	457	145	425	160	394	175	-	-
	11	565	105	528	121	499	133	468	147	436	162	404	176	-	-
	12	581	106	542	122	513	134	481	148	448	163	415	178	-	-
490.6	5	541	114	505	132	478	145	448	160	417	176	386	192	355	208
	6	556	115	519	133	491	146	461	161	429	178	397	194	365	210
	7	572	117	534	134	505	148	**474**	**163**	441	180	408	196	375	212
	8	588	118	549	136	519	149	487	165	454	182	420	198	-	-
	9	605	119	564	137	534	151	501	166	466	183	432	200	-	-
	10	621	120	579	138	548	152	514	168	478	185	443	202	-	-
	11	637	121	594	140	562	154	527	170	491	187	454	204	-	-
	12	654	123	610	141	577	155	542	171	504	189	467	206	-	-
560.6	5	612	127	571	146	540	161	507	178	472	196	437	213	401	231
	6	629	128	587	147	555	163	521	179	485	197	449	215	412	233
	7	647	130	604	149	571	164	**536**	**181**	499	200	462	218	424	235
	8	665	131	621	151	587	166	551	183	513	202	475	220	-	-
	9	684	132	638	152	604	168	566	185	527	204	488	222	-	-
	10	702	134	655	154	620	169	581	187	541	206	501	224	-	-
	11	720	135	672	155	635	171	596	189	555	208	514	227	-	-
	12	739	136	690	157	653	173	612	190	570	210	528	229	-	-
630.6	5	685	145	639	166	605	183	567	202	528	223	489	243	449	262
	6	704	146	657	168	621	185	583	204	542	225	502	245	461	265
	7	724	147	676	170	639	187	**600**	**206**	558	227	517	248	475	268
	8	745	149	695	171	657	189	617	208	574	230	532	250	-	-
	9	765	151	714	173	676	191	634	210	590	232	546	253	-	-
	10	786	152	733	175	694	193	651	212	606	234	561	255	-	-
	11	806	153	752	177	711	195	667	215	621	236	575	258	-	-
	12	828	155	773	178	731	196	686	217	638	239	591	260	-	-

Tw= Outlet water temperature °C **kWf** = Cooling capacity (kW). **kWa** = Compressor power input (kW)

The standard performances refer to a 5°C temperature difference between the water entering and leaving the heat exchanger and to operation of the unit with all fans at nominal or maximum speed. A 0.44 x 10^{-4} m^2 K/W fouling factor has also been considered with the unit installed at zero meters above sea level (Pb = 1013mbar).

STANDARD PERFORMANCES - IR COOLING UNIT ONLY

Performances - Extra low noise unit AX

MOD.	TW	OUTDOOR AIR TEMPERATURE (°C D.B.)													
		20		25		30		35		40		45		50	
		kWf	kWa	kWf	kWa	kWf	kWa	kWf	kWa	kWf	kWa	kWf	kWa	kWf	kWa
350.5	5	377	82.1	352	94.5	332	104	312	115	290	126	269	138	247	149
	6	387	82.9	361	95.3	342	105	321	116	298	128	276	139	254	150
	7	398	83.7	372	96.3	352	106	**330**	**117**	307	129	284	141	261	152
	8	410	84.6	382	97.4	362	107	339	118	316	130	292	142	-	-
	9	421	85.5	393	98.4	372	108	349	119	324	132	300	144	-	-
	10	432	86.3	403	99.3	381	109	358	121	333	133	308	145	-	-
	11	443	87.2	414	100	391	111	367	122	342	134	316	146	-	-
	12	455	88.0	425	101	402	112	377	123	351	136	325	148	-	-
390.6	5	402	89.1	375	103	355	113	333	125	310	137	287	150	263	162
	6	413	89.9	385	103	364	114	342	126	318	139	295	151	271	163
	7	425	90.9	397	105	375	115	**352**	**127**	327	140	303	153	279	165
	8	437	91.9	408	106	386	116	362	128	337	142	312	154	-	-
	9	449	92.8	419	107	396	118	372	130	346	143	321	156	-	-
	10	461	93.7	430	108	407	119	382	131	355	144	329	157	-	-
	11	473	94.6	441	109	417	120	392	132	364	146	337	159	-	-
	12	486	95.6	453	110	429	121	402	134	374	147	347	160	-	-
440.6	5	471	102	440	117	416	129	390	142	363	157	336	171	309	185
	6	484	103	452	118	428	130	401	144	373	158	346	172	318	186
	7	499	104	465	119	440	132	**413**	**145**	384	160	356	174	327	188
	8	513	105	479	121	453	133	425	147	395	162	366	176	-	-
	9	527	106	492	122	465	134	436	148	406	163	376	178	-	-
	10	541	107	505	123	477	136	448	150	417	165	386	180	-	-
	11	555	108	518	124	490	137	459	151	427	166	396	181	-	-
	12	570	109	532	126	503	138	472	152	439	168	407	183	-	-
490.6	5	530	118	494	136	467	149	439	165	408	182	378	198	347	214
	6	544	119	508	137	480	151	451	166	419	183	389	200	357	216
	7	560	120	523	138	494	152	**464**	**168**	432	185	400	202	367	218
	8	576	122	538	140	508	154	477	170	444	187	411	204	-	-
	9	592	123	553	141	522	156	490	172	456	189	422	206	-	-
	10	608	124	567	143	536	157	503	173	468	191	434	208	-	-
	11	623	125	582	144	550	159	516	175	480	193	445	210	-	-
	12	640	126	597	145	565	160	530	177	493	195	457	212	-	-
560.6	5	599	131	559	150	529	165	496	182	462	201	428	219	393	237
	6	616	132	575	152	544	167	510	184	475	203	440	221	404	239
	7	634	133	592	153	559	169	**525**	**186**	488	205	452	224	416	242
	8	652	135	608	155	575	171	540	188	502	207	465	226	-	-
	9	670	136	625	156	591	172	555	190	516	209	478	228	-	-
	10	687	137	642	158	607	174	569	192	530	211	491	231	-	-
	11	705	139	658	159	622	176	584	194	543	214	503	233	-	-
	12	724	140	676	161	639	177	600	196	558	216	517	235	-	-
630.6	5	671	149	626	171	592	189	556	208	517	229	479	250	440	270
	6	690	150	644	173	609	190	571	210	532	231	492	252	452	273
	7	710	152	663	175	627	192	**588**	**212**	547	234	507	255	465	275
	8	730	153	681	176	644	194	605	214	563	236	521	258	-	-
	9	750	155	700	178	662	196	621	216	578	239	535	260	-	-
	10	770	156	719	180	680	198	638	219	593	241	550	263	-	-
	11	790	158	737	182	697	200	654	221	609	243	564	265	-	-
	12	811	160	757	184	716	202	672	223	625	246	579	268	-	-

Tw= Outlet water temperature °C **kWf** = Cooling capacity (kW). **kWa** = Compressor power input (kW)
The standard performances refer to a 5°C temperature difference between the water entering and leaving the heat exchanger and to operation of the unit with all fans at nominal or maximum speed. A 0.44 x 10^{-4} m^2 K/W fouling factor has also been considered with the unit installed at zero meters above sea level (Pb = 1013mbar).

STANDARD PERFORMANCES - IP HEAT PUMP UNITS

Performances in cooling mode - Standard Unit AB

MOD.	TW	OUTDOOR AIR TEMPERATURE (°C D.B.)													
		20		25		30		35		40		45		50	
		kWf	kWa	kWf	kWa	kWf	kWa	kWf	kWa	kWf	kWa	kWf	kWa	kWf	kWa
350.5	5	389	73.0	363	84.0	344	92.5	322	102	300	112	278	123	255	133
	6	400	73.7	373	84.7	353	93.4	331	103	308	113	286	124	262	134
	7	412	74.4	384	85.6	363	94.3	**341**	**104**	317	115	294	125	270	135
	8	423	75.2	395	86.6	374	95.4	351	105	326	116	302	126	-	-
	9	435	76.0	406	87.4	384	96.3	360	106	335	117	310	128	-	-
	10	447	76.7	417	88.3	394	97.3	370	107	344	118	319	129	-	-
	11	458	77.5	427	89.2	404	98.2	379	108	353	119	327	130	-	-
	12	470	78.2	439	90.0	415	99.2	390	109	363	121	336	131	-	-
390.6	5	415	78.6	388	90.4	367	99.6	344	110	320	121	297	132	272	143
	6	427	79.3	399	91.3	377	101	354	111	329	122	305	133	280	144
	7	439	80.1	410	92.2	388	102	**364**	**112**	339	123	314	135	288	146
	8	452	81.0	422	93.2	399	103	374	113	348	125	323	136	-	-
	9	464	81.8	433	94.2	410	104	385	114	358	126	331	137	-	-
	10	477	82.6	445	95.1	421	105	395	116	367	127	340	139	-	-
	11	489	83.5	456	96.0	431	106	405	117	377	129	349	140	-	-
	12	502	84.3	469	97.0	443	107	416	118	387	130	358	142	-	-
440.6	5	486	91.2	454	105	429	116	403	127	375	141	347	153	319	166
	6	500	92.1	466	106	441	117	414	129	385	142	357	155	328	167
	7	514	93.0	480	107	454	118	**426**	**130**	396	143	367	156	337	169
	8	529	94.0	494	108	467	119	438	131	408	145	377	158	-	-
	9	543	95.0	507	109	480	120	450	133	419	146	388	160	-	-
	10	558	95.9	521	110	492	122	462	134	430	148	398	161	-	-
	11	572	96.9	534	111	505	123	474	135	441	149	408	163	-	-
	12	588	97.8	549	113	519	124	487	137	453	151	419	164	-	-
490.6	5	548	105	511	120	484	133	454	146	422	161	391	176	359	190
	6	563	106	526	121	497	134	466	147	434	163	402	177	369	192
	7	579	107	541	123	511	135	**480**	**149**	447	164	414	179	380	194
	8	596	108	556	124	526	137	494	151	459	166	425	181	-	-
	9	612	109	572	125	540	138	507	152	472	168	437	183	-	-
	10	629	110	587	126	555	139	521	154	484	169	449	185	-	-
	11	645	111	602	128	569	141	534	155	497	171	460	186	-	-
	12	662	112	618	129	584	142	548	157	510	173	473	188	-	-
560.6	5	616	116	575	134	544	148	511	163	475	179	440	196	404	212
	6	633	118	591	135	559	149	525	164	488	181	452	197	415	213
	7	652	119	609	137	575	151	**540**	**166**	502	183	465	199	427	216
	8	670	120	626	138	592	152	555	168	517	185	479	202	-	-
	9	689	121	643	140	608	154	571	170	531	187	492	204	-	-
	10	707	122	660	141	624	155	586	171	545	189	505	206	-	-
	11	725	124	677	142	640	157	601	173	559	191	518	208	-	-
	12	745	125	695	144	657	158	617	175	574	192	532	210	-	-
630.6	5	694	133	648	153	613	168	575	185	535	204	495	223	455	241
	6	713	134	666	154	630	170	591	187	550	206	509	225	468	243
	7	734	135	685	156	648	171	**608**	**189**	566	208	524	227	481	246
	8	755	137	705	157	666	173	625	191	582	211	539	230	-	-
	9	776	138	724	159	685	175	642	193	598	213	554	232	-	-
	10	796	139	743	160	703	177	659	195	614	215	568	234	-	-
	11	817	141	762	162	721	179	676	197	629	217	583	237	-	-
	12	839	142	783	164	740	180	695	199	646	219	599	239	-	-

Tw= Outlet water temperature °C **kWf** = Cooling capacity (kW). **kWa** = Compressor power input (kW)
The standard performances refer to a 5°C temperature difference between the water entering and leaving the heat exchanger and to operation of the unit with all fans at nominal or maximum speed. A 0.44 x 10^{-4} m^2 K/W fouling factor has also been considered with the unit installed at zero meters above sea level (Pb = 1013mbar).

STANDARD PERFORMANCES - IP HEAT PUMP UNITS

Performances in heating mode - Standard Unit AB

MOD.	TW	OUTDOOR AIR TEMPERATURE (°C D.B.)													
		-6		-2		2		6		9		12		15	
		kWt	kWa	kWt	kWa	kWt	kWa	kWt	kWa	kWt	kWa	kWt	kWa	kWt	kWa
350.5	30	283	75.5	324	75.9	354	77.0	377	77.4	404	78.3	432	79.2	462	80.1
	35	281	83.6	322	84.1	352	85.3	375	85.8	402	86.8	430	87.8	460	88.8
	40	279	93.0	320	93.5	350	94.8	373	95.4	400	96.5	427	97.6	457	98.7
	45	278	103	318	104	348	105	**370**	**106**	397	107	424	108	454	110
	50	276	115	316	116	345	117	367	118	394	119	421	121	451	122
390.6	30	300	81.2	344	81.6	376	82.8	400	83.2	429	84.2	459	85.2	491	86.1
	35	299	89.9	342	90.5	374	91.7	398	92.3	427	93.3	456	94.4	488	95.5
	40	297	100	340	101	372	102	396	103	424	104	454	105	485	106
	45	295	111	338	112	370	113	**393**	**114**	421	115	451	117	482	118
	50	293	124	336	124	367	126	390	127	419	128	448	130	479	131
440.6	30	348	92.6	399	93.1	436	94.4	464	94.9	498	96.0	532	97.1	569	98.2
	35	346	103	397	103	434	105	462	105	495	106	530	108	566	109
	40	344	114	395	115	432	116	459	117	492	118	527	120	563	121
	45	342	127	392	127	429	129	**456**	**130**	489	132	523	133	559	135
	50	340	141	389	142	426	144	453	145	486	146	519	148	555	150
490.6	30	394	108	452	108	494	110	525	110	563	112	602	113	644	114
	35	392	119	449	120	491	121	523	122	560	124	599	125	641	126
	40	390	132	447	133	489	135	520	136	557	137	596	139	637	141
	45	387	147	444	148	485	150	**516**	**151**	553	153	592	154	633	156
	50	384	164	441	165	482	167	512	168	550	170	588	172	629	174
560.6	30	440	118	504	119	551	121	586	121	629	123	672	124	719	125
	35	438	131	502	132	549	134	583	134	626	136	669	137	716	139
	40	435	146	499	146	545	149	580	149	622	151	665	153	711	155
	45	432	162	495	163	542	165	**576**	**166**	618	168	660	170	707	172
	50	429	180	492	181	538	183	572	185	613	187	656	189	702	191
630.6	30	502	139	576	140	630	142	670	142	718	144	768	146	822	147
	35	500	154	573	155	627	157	666	158	715	160	764	161	817	163
	40	497	171	570	172	623	174	663	175	711	177	760	180	813	182
	45	494	190	566	191	619	194	**658**	**195**	706	197	755	200	807	202
	50	490	211	562	213	614	216	653	217	701	219	749	222	802	224

Tw= Outlet water temperature °C **kWt** = Heating capacity (kW). **kWa** = Compressor power input (kW)

The standard performances refer to a 5°C temperature difference between the water entering and leaving the plate-type heat exchanger, outdoor air with 87% relative humidity and to operation of the unit with all the fans to top speed. A 0.44 x 10^{-4} m^2 K/W fouling factor has also been considered with the unit installed at zero meters above sea level (Pb = 1013mbar).

NOTE

For air temperatures of less than 7°C, the heating capacity is declared without considering the effect of the defrosting, strictly correlated with the humidity in the outdoor air.

STANDARD PERFORMANCES - IP HEAT PUMP UNITS

Performances in cooling mode - Low noise Unit AS

MOD.	TW	OUTDOOR AIR TEMPERATURE (°C D.B.)													
		20		25		30		35		40		45		50	
		kWf	kWa	kWf	kWa	kWf	kWa	kWf	kWa	kWf	kWa	kWf	kWa	kWf	kWa
350.5	5	373	78.6	348	90.4	329	99.6	309	110	288	121	266	132	245	143
	6	384	79.3	358	91.3	339	101	318	111	296	122	274	133	251	144
	7	395	80.1	368	92.2	348	102	**327**	**112**	304	123	282	135	259	146
	8	406	81.0	379	93.2	358	103	336	113	313	125	290	136	-	-
	9	417	81.8	389	94.2	368	104	346	114	321	126	298	137	-	-
	10	428	82.6	400	95.1	378	105	355	116	330	127	306	139	-	-
	11	439	83.5	410	96.0	388	106	364	117	338	129	313	140	-	-
	12	451	84.3	421	97.0	398	107	374	118	348	130	322	142	-	-
390.6	5	398	84.9	372	97.7	352	108	330	119	307	131	284	143	261	154
	6	409	85.7	382	98.6	361	109	339	120	316	132	292	144	268	156
	7	421	86.6	393	99.6	372	110	**349**	**121**	325	133	301	145	276	157
	8	433	87.5	404	101	382	111	359	122	334	135	309	147	-	-
	9	445	88.4	416	102	393	112	369	124	343	136	318	148	-	-
	10	457	89.3	427	103	403	113	379	125	352	138	326	150	-	-
	11	469	90.2	437	104	414	114	388	126	361	139	335	151	-	-
	12	481	91.0	449	105	425	115	399	127	371	140	344	153	-	-
440.6	5	467	98.2	436	113	412	125	387	137	360	151	333	165	306	178
	6	480	99.2	448	114	423	126	397	139	370	153	342	167	315	180
	7	494	100	461	115	436	127	**409**	**140**	381	154	352	168	324	182
	8	508	101	474	117	448	128	421	142	391	156	362	170	-	-
	9	522	102	487	118	461	130	432	143	402	158	372	172	-	-
	10	536	103	500	119	473	131	444	144	413	159	382	173	-	-
	11	549	104	513	120	485	132	455	146	423	161	392	175	-	-
	12	564	105	527	121	498	134	467	147	435	162	403	177	-	-
490.6	5	526	113	491	130	464	143	436	158	406	174	376	190	345	205
	6	541	114	505	131	477	145	448	159	417	176	386	192	355	207
	7	557	115	519	133	491	146	**461**	**161**	429	177	397	193	365	209
	8	572	116	534	134	505	148	474	163	441	179	409	196	-	-
	9	588	118	549	135	519	149	487	164	453	181	420	198	-	-
	10	604	119	563	137	533	151	500	166	465	183	431	200	-	-
	11	619	120	578	138	546	152	513	168	477	185	442	201	-	-
	12	636	121	594	139	561	154	527	169	490	187	454	203	-	-
560.6	5	591	126	552	145	522	159	490	176	456	193	422	211	388	228
	6	608	127	567	146	536	161	503	177	468	195	434	213	398	230
	7	625	128	584	147	552	162	**518**	**179**	482	197	446	215	410	233
	8	643	129	600	149	568	164	533	181	496	199	459	217	-	-
	9	661	131	617	150	583	166	547	183	509	201	472	220	-	-
	10	678	132	633	152	599	167	562	185	523	203	484	222	-	-
	11	696	133	649	153	614	169	576	186	536	205	497	224	-	-
	12	715	135	667	155	631	171	592	188	551	207	510	226	-	-
630.6	5	667	143	622	165	588	181	552	200	514	221	476	240	437	260
	6	685	144	639	166	605	183	567	202	528	223	489	243	449	262
	7	705	146	658	168	622	185	**584**	**204**	543	225	503	245	462	265
	8	725	148	677	170	640	187	601	206	559	227	518	248	-	-
	9	745	149	695	171	658	189	617	208	574	230	532	250	-	-
	10	765	151	714	173	675	191	633	210	589	232	546	253	-	-
	11	784	152	732	175	692	193	650	212	604	234	560	255	-	-
	12	806	153	752	177	711	195	667	215	621	236	575	258	-	-

Tw= Outlet water temperature °C **kWf** = Cooling capacity (kW). **kWa** = Compressor power input (kW)

The standard performances refer to a 5°C temperature difference between the water entering and leaving the heat exchanger and to operation of the unit with all fans at nominal or maximum speed. A 0.44 x 10^{-4} m^2 K/W fouling factor has also been considered with the unit installed at zero meters above sea level (Pb = 1013mbar).

STANDARD PERFORMANCES - IP HEAT PUMP UNITS

Performances in heating mode - Low noise Unit AS

MOD.	TW	OUTDOOR AIR TEMPERATURE (°C D.B.)													
		-6		-2		2		6		9		12		15	
		kWt	kWa	kWt	kWa	kWt	kWa	kWt	kWa	kWt	kWa	kWt	kWa	kWt	kWa
350.5	30	271	71.9	311	72.3	340	73.3	361	73.8	388	74.6	414	75.5	443	76.3
	35	270	79.7	309	80.2	338	81.3	360	81.7	386	82.7	412	83.6	441	84.6
	40	268	88.6	307	89.1	336	90.4	357	90.9	383	91.9	410	93.0	438	94.0
	45	266	98.5	305	99.1	334	100	**355**	**101**	381	102	407	103	435	105
	50	264	109	303	110	331	112	353	112	378	114	404	115	432	116
390.6	30	288	76.9	330	77.3	361	78.4	384	78.9	412	79.8	440	80.7	471	81.6
	35	286	85.2	328	85.7	359	86.9	382	87.4	409	88.4	438	89.4	468	90.4
	40	285	94.7	326	95.3	357	96.6	380	97.2	407	98.3	435	99.4	466	101
	45	283	105	324	106	354	107	**377**	**108**	404	109	432	110	462	112
	50	281	117	322	118	352	119	374	120	402	121	429	123	459	124
440.6	30	334	88.3	383	88.8	419	90.0	446	90.6	478	91.6	511	92.6	547	93.7
	35	333	97.8	381	98.4	417	99.8	444	100	476	102	509	103	544	104
	40	331	109	379	109	415	111	441	112	473	113	506	114	541	115
	45	329	121	377	122	412	123	**438**	**124**	470	125	502	127	537	128
	50	326	134	374	135	409	137	435	138	466	139	499	141	534	143
490.6	30	378	102	433	102	474	104	504	104	540	106	578	107	618	108
	35	376	113	431	113	471	115	501	116	538	117	575	118	615	120
	40	374	125	429	126	469	128	498	129	535	130	572	132	611	133
	45	371	139	426	140	465	142	**495**	**143**	531	145	568	146	607	148
	50	369	155	423	156	462	158	492	159	527	161	564	163	603	164
560.6	30	422	112	484	113	529	115	563	115	604	117	646	118	691	119
	35	420	125	481	125	527	127	560	128	601	129	642	131	687	132
	40	418	139	479	139	524	141	557	142	597	144	639	145	683	147
	45	415	154	475	155	520	157	**553**	**158**	593	160	634	162	678	163
	50	412	171	472	172	516	175	549	176	589	178	630	180	674	182
630.6	30	483	132	553	132	605	134	643	135	690	137	738	138	789	140
	35	480	146	550	147	602	149	640	150	686	151	734	153	785	155
	40	477	162	547	163	598	166	636	166	683	168	730	170	781	172
	45	474	180	543	181	594	184	**632**	**185**	678	187	725	189	775	191
	50	471	201	540	202	590	204	628	206	673	208	720	210	770	213

Tw= Outlet water temperature °C **kWt** = Heating capacity (kW). **kWa** = Compressor power input (kW)

The standard performances refer to a 5°C temperature difference between the water entering and leaving the plate-type heat exchanger, outdoor air with 87% relative humidity and to operation of the unit with all the fans to top speed. A 0.44 x 10^{-4} m^2 K/W fouling factor has also been considered with the unit installed at zero meters above sea level (Pb = 1013mbar).

NOTE

For air temperatures of less than 7°C, the heating capacity is declared without considering the effect of the defrosting, strictly correlated with the humidity in the outdoor air.

STANDARD PERFORMANCES - IP HEAT PUMP UNITS

Performances in cooling mode - Extra low noise Unit AX

MOD.	TW	OUTDOOR AIR TEMPERATURE (°C D.B.)													
		20		25		30		35		40		45		50	
		kWf	kWa	kWf	kWa	kWf	kWa	kWf	kWa	kWf	kWa	kWf	kWa	kWf	kWa
350.5	5	366	80.7	342	92.8	323	102	304	113	282	124	262	136	240	147
	6	377	81.4	351	93.7	332	103	312	114	290	125	269	137	247	148
	7	388	82.3	362	94.7	342	104	**321**	**115**	299	127	277	138	254	149
	8	399	83.2	372	95.7	352	105	330	116	307	128	284	140	-	-
	9	409	84.0	382	96.7	361	107	339	117	316	129	292	141	-	-
	10	420	84.9	392	97.6	371	108	348	119	324	131	300	143	-	-
	11	431	85.7	402	98.6	381	109	357	120	332	132	308	144	-	-
	12	443	86.5	413	99.6	391	110	367	121	341	133	316	145	-	-
390.6	5	390	87.0	364	100	345	110	323	122	301	134	279	146	256	158
	6	401	87.8	374	101	354	111	332	123	309	135	286	147	263	159
	7	413	88.7	385	102	364	112	**342**	**124**	318	137	295	149	271	161
	8	425	89.7	396	103	375	114	352	125	327	138	303	151	-	-
	9	436	90.6	407	104	385	115	361	127	336	140	311	152	-	-
	10	448	91.5	418	105	395	116	371	128	345	141	320	154	-	-
	11	459	92.4	429	106	405	117	380	129	354	142	328	155	-	-
	12	472	93.3	440	107	416	118	391	130	364	144	337	157	-	-
440.6	5	457	101	426	116	403	128	378	141	352	156	326	170	299	183
	6	469	102	438	117	414	129	389	143	362	157	335	171	308	185
	7	483	103	451	119	426	131	**400**	**144**	372	159	345	173	317	187
	8	497	104	464	120	438	132	411	146	383	160	354	175	-	-
	9	510	105	476	121	450	133	423	147	393	162	364	177	-	-
	10	524	106	489	122	462	135	434	149	404	164	374	178	-	-
	11	537	107	501	123	474	136	445	150	414	165	383	180	-	-
	12	552	108	515	125	487	137	457	151	425	167	394	182	-	-
490.6	5	515	116	481	133	454	147	426	162	397	178	367	194	338	210
	6	529	117	494	134	467	148	438	163	408	180	378	196	347	212
	7	544	118	508	136	481	150	**451**	**165**	420	182	389	198	357	214
	8	560	119	523	137	494	151	464	167	431	184	400	200	-	-
	9	575	121	537	139	508	153	477	168	443	186	411	202	-	-
	10	591	122	551	140	521	154	489	170	455	188	422	204	-	-
	11	606	123	565	141	535	156	502	172	467	189	432	206	-	-
	12	622	124	581	143	549	157	515	174	479	191	444	208	-	-
560.6	5	580	129	541	149	512	164	480	180	447	199	414	217	380	234
	6	596	130	556	150	526	165	494	182	459	201	425	219	391	237
	7	613	132	572	151	541	167	**508**	**184**	473	203	438	221	402	239
	8	631	133	589	153	557	169	522	186	486	205	450	224	-	-
	9	648	134	605	155	572	170	537	188	499	207	463	226	-	-
	10	665	136	621	156	587	172	551	190	513	209	475	228	-	-
	11	682	137	637	158	602	174	565	192	526	211	487	230	-	-
	12	701	138	654	159	619	175	580	193	540	213	500	233	-	-
630.6	5	653	147	609	170	576	187	541	206	503	227	466	247	428	268
	6	671	149	626	171	592	189	556	208	517	229	479	250	440	270
	7	691	150	645	173	610	190	**572**	**210**	532	231	493	252	453	273
	8	710	152	663	175	627	193	588	212	547	234	507	255	-	-
	9	730	153	681	177	644	195	604	214	562	236	521	258	-	-
	10	749	155	699	178	661	196	620	217	577	239	535	260	-	-
	11	768	156	717	180	678	198	636	219	592	241	548	263	-	-
	12	789	158	736	182	696	200	654	221	608	243	563	265	-	-

Tw= Outlet water temperature °C **kWf** = Cooling capacity (kW). **kWa** = Compressor power input (kW)

The standard performances refer to a 5°C temperature difference between the water entering and leaving the heat exchanger and to operation of the unit with all fans at nominal or maximum speed. A 0.44 x 10^{-4} m^2 K/W fouling factor has also been considered with the unit installed at zero meters above sea level (Pb = 1013mbar).

STANDARD PERFORMANCES - IP HEAT PUMP UNITS

Performances in heating mode - Extra low noise Unit AX

MOD.	TW	OUTDOOR AIR TEMPERATURE (°C D.B.)													
		-6		-2		2		6		9		12		15	
		kWt	kWa	kWt	kWa	kWt	kWa	kWt	kWa	kWt	kWa	kWt	kWa	kWt	kWa
350.5	30	269	70.2	308	70.6	337	71.6	358	72.0	384	72.8	411	73.7	440	74.5
	35	267	77.8	306	78.3	335	79.3	356	79.8	382	80.7	409	81.6	437	82.6
	40	266	86.5	305	87.0	333	88.2	354	88.7	380	89.7	406	90.8	435	91.8
	45	264	96.1	303	96.7	331	98.0	**352**	**98.6**	378	99.7	404	101	432	102
	50	262	107	301	108	329	109	350	110	375	111	401	112	429	113
390.6	30	285	75.5	326	75.9	357	77.0	380	77.4	407	78.3	435	79.2	466	80.1
	35	283	83.6	325	84.1	355	85.3	378	85.8	405	86.8	433	87.8	463	88.8
	40	282	93.0	323	93.5	353	94.8	376	95.4	403	96.5	431	97.6	461	98.7
	45	280	103	321	104	351	105	**373**	**106**	400	107	428	108	458	110
	50	278	115	318	116	348	117	370	118	397	119	425	121	454	122
440.6	30	331	86.1	379	86.7	414	87.8	441	88.4	473	89.4	505	90.4	541	91.4
	35	329	95.5	377	96.0	412	97.4	439	97.9	470	99.1	503	100	538	101
	40	327	106	375	107	410	108	436	109	468	110	500	111	535	113
	45	325	118	372	119	407	120	**433**	**121**	464	122	497	124	531	125
	50	323	131	370	132	404	134	430	135	461	136	493	138	527	139
490.6	30	374	99.7	429	100	469	102	499	102	535	103	572	105	612	106
	35	372	110	427	111	467	113	496	113	532	115	569	116	609	117
	40	370	123	424	124	464	125	493	126	529	127	566	129	605	130
	45	368	136	421	137	461	139	**490**	**140**	526	142	562	143	601	145
	50	365	152	418	153	458	155	487	156	522	157	558	159	597	161
560.6	30	418	110	479	110	524	112	557	112	597	114	638	115	683	116
	35	416	122	476	122	521	124	554	125	594	126	635	128	680	129
	40	413	135	474	136	518	138	551	139	591	140	632	142	676	143
	45	410	150	470	151	514	153	**547**	**154**	587	156	627	158	671	159
	50	407	167	467	168	511	170	543	171	583	173	623	175	666	177
630.6	30	477	129	547	130	598	131	636	132	682	134	730	135	780	137
	35	475	143	544	144	595	146	633	146	679	148	726	150	776	152
	40	472	159	541	160	592	162	629	163	675	165	722	167	772	169
	45	469	176	537	178	588	180	**625**	**181**	670	183	717	185	767	187
	50	466	196	534	197	584	200	621	201	666	204	712	206	761	208

Tw= Outlet water temperature °C **kWt** = Heating capacity (kW). **kWa** = Compressor power input (kW)

The standard performances refer to a 5°C temperature difference between the water entering and leaving the plate-type heat exchanger, outdoor air with 87% relative humidity and to operation of the unit with all the fans to top speed. A 0.44 x 10^{-4} m^2 K/W fouling factor has also been considered with the unit installed at zero meters above sea level (Pb = 1013mbar).

NOTE

For air temperatures of less than 7°C, the heating capacity is declared without considering the effect of the defrosting, strictly correlated with the humidity in the outdoor air.

CORRECTION FACTOR FOR THE USE OF GLYCOL

Correction factor for the use of glycol IN HEATING MODE

ETHYLENE GLYCOL with water produced between 30÷55ºC.

Percentage Of glycol in mass / volume	0 / 0	10 / 8,9	20 / 18,1	30 / 27,7	40 / 37,5
Freezing point [°C]	0	-3.2	-8	-14	-22
Heating capacity CCPF Power input CCPA	1.000	0.995	0.985	0.975	0.970
Compressor power input CCPA	1.000	1.010	1.015	1.020	1.030
Water flow rate CCQA	1.000	1.038	1.062	1.091	1.127
Water pressure drop CCDP	1.000	1.026	1.051	1.077	1.103

PROPYLENE GLYCOL with water produced between 30÷55ºC.

Percentage Of glycol in mass / volume	0 / 0	10 / 9,6	20 / 19,4	30 / 29,4	40 / 39,6
Freezing point [°C]	0	-3.3	-7	-13	-21
Heating capacity CCPF Power input CCPA	1.000	0.990	0.975	0.965	0.955
Compressor power input CCPA	1.000	1.010	1.020	1.030	1.040
Water flow rate CCQA	1.000	1.018	1.032	1.053	1.082
Water pressure drop CCDP	1.000	1.026	1.051	1.077	1.103

Correction factor for the use of glycol IN COOLING MODE

ETHYLENE GLYCOL with water produced between 5÷20ºC.

Percentage Of glycol in mass / volume	0 / 0	10 / 8,9	20 / 18,1	30 / 27,7	40 / 37,5
Freezing point [°C]	0	-3.2	-8	-14	-22
Cooling capacity CCPF Power input CCPA	1.00	0.99	0.98	0.97	0.95
Compressor power input CCPA	1.00	1.00	0.99	0.99	0.98
Water flow rate CCQA	1.00	1.04	1.08	1.12	1.16
Water pressure drop CCDP	1.00	1.08	1.16	1.25	1.35

PROPYLENE GLYCOL with water produced between 5÷20ºC.

Percentage Of glycol in mass / volume	0 / 0	10 / 9,6	20 / 19,4	30 / 29,4	40 / 39,6
Freezing point [°C]	0	-3.3	-7	-13	-21
Cooling capacity CCPF Power input CCPA	1.00	0.98	0.96	0.94	0.92
Compressor power input CCPA	1.00	0.99	0.98	0.95	0.93
Water flow rate CCQA	1.00	1.01	1.03	1.06	1.09
Water pressure drop CCDP	1.00	1.05	1.11	1.22	1,38

Brine Unit BR - BP

Correction factors to apply to the Standard unit data

ETHYLENE GLYCOL

percentage of glycol in mass / volume	20 / 18.1								
freezing point [°C]	-8								
Produced water temperature	4	2	0	-2	-4	-6	-8	-10	-12
Refrigerating power c.f.	0.912	0.855	0.798	0.738	0.683	-	-	-	-
Power input c.f.	0.967	0.957	0.947	0.927	0.897	-	-	-	-
Water flow rate c.f.	0.955	0.895	0.836	0.773	0.715	-	-	-	-
Water pressure drop c.f.	1.090	1.095	1.100	1.110	1.120	-	-	-	-

percentage of glycol in mass / volume	30 / 27.7								
freezing point [°C]	-14								
Produced water temperature	4	2	0	-2	-4	-6	-8	-10	-12
Refrigerating power c.f.	0.899	0.842	0.785	0.725	0.670	0.613	0.562	-	-
Power input c.f.	0.960	0.950	0.940	0.920	0.890	0.870	0.840	-	-
Water flow rate c.f.	0.967	0.905	0.844	0.780	0.720	0.659	0.604	-	-
Water pressure drop c.f.	1.140	1.145	1.150	1.155	1.160	1.175	1.190	-	-

percentage of glycol in mass / volume	40 / 37.5								
freezing point [°C]	-22								
Produced water temperature	4	2	0	-2	-4	-6	-8	-10	-12
Refrigerating power c.f.	0.884	0.827	0.770	0.710	0.655	0.598	0.547	0.490	0.437
Power input c.f.	0.880	0.870	0.860	0.840	0.810	0.790	0.760	0.724	0.686
Water flow rate c.f.	1.150	1.151	1.153	1.154	1.155	1.157	1.158	1.159	1.161
Water pressure drop c.f.	1.190	1.195	1.200	1.210	1.220	1.235	1.250	1.269	1.290

PROPYLENE GLYCOL

percentage of glycol in mass / volume	20 / 19.4								
freezing point [°C]	-7								
Produced water temperature	4	2	0	-2	-4	-6	-8	-10	-12
Refrigerating power c.f.	0.874	0.807	0.740	0.690	0.641	-	-	-	-
Power input c.f.	0.945	0.935	0.925	0.900	0.875	-	-	-	-
Water flow rate c.f.	0.915	0.845	0.774	0.723	0.671	-	-	-	-
Water pressure drop c.f.	1.110	1.115	1.120	1.130	1.140	-	-	-	-

percentage of glycol in mass / volume	30 / 29.4								
freezing point [°C]	-13								
Produced water temperature	4	2	0	-2	-4	-6	-8	-10	-12
Refrigerating power c.f.	0.869	0.799	0.729	0.680	0.630	0.583	0.536	-	-
Power input c.f.	0.935	0.923	0.910	0.888	0.865	0.838	0.810	-	-
Water flow rate c.f.	0.934	0.859	0.784	0.731	0.678	0.627	0.576	-	-
Water pressure drop c.f.	1.160	1.175	1.190	1.200	1.210	1.255	1.300	-	-

percentage of glycol in mass / volume	40 / 39.6								
freezing point [°C]	-21								
Produced water temperature	4	2	0	-2	-4	-6	-8	-10	-12
Refrigerating power c.f.	0.848	0.784	0.719	0.670	0.620	0.570	0.520	0.478	0.438
Power input c.f.	0.865	0.855	0.845	0.820	0.795	0.773	0.750	0.714	0.680
Water flow rate c.f.	1.116	1.114	1.112	1.110	1.108	1.107	1.105	1.103	1.101
Water pressure drop c.f.	1.230	1.275	1.320	1.375	1.430	1.500	1.570	1.642	1.724

GENERAL SPECIFICATIONS - VERSION WITH DESUPERHEATER (VD)
IR COOLING UNIT ONLY

Acoustic Version: AB (Standard Unit)

Recovery heat exchanger specifications

MODEL	350.5	390.6	440.6	490.6	560.6	630.6	UM
Type of recovery exchanger	Brazed plates						-
Quantity	1						N°
Max. operating pressure on wet side	600						kPa
Total water content of recovery exchangers	1.3	1.3	1.3	1.3	1.3	1.3	l
Unit specification							
Cooling capacity VD(1)	365	389	457	514	581	650	kW
Power input compressor VD (1)	102	110	128	147	163	186	kW
Total power input VD (1)	117	125	146	165	184	207	kW
EER VD (1)	3.12	3.11	3.13	3.12	3.16	3.14	-
Water flow rate VD (1)	17.5	18.6	21.8	24.6	27.8	31.0	l/s
Water pressure drop VD (1)	56	58	62	65	63	60	kPa
Recovered heating capacity (1)	87.7	93.4	110	123	139	156	kW
Recovered water flow rate (1)	4.19	4.46	5.26	5.88	6.64	7.45	l/s
Recovered water pressure drop (1)	24	27	25	32	31	39	kPa

(1): The data refer to: Water temperature: evaporator inlet **:12°C** - evaporator outlet: **7°C,** Outdoor air temperature **35°C**.
The data refer to: Water temperature: recovery inlet :**40°C** - recovery outlet: **45°C.**

Acoustic Version: AS (Low noise Unit)

Recovery heat exchanger specifications

MODEL	350.5	390.6	440.6	490.6	560.6	630.6	UM
Type of recovery exchanger	Brazed plates						-
Quantity	1						N°
Max. operating pressure on wet side	600						kPa
Total water content of recovery exchangers	3.8	3.8	3.8	3.8	3.8	3.8	l
Unit specification							
Cooling capacity VD(1)	350	373	438	493	557	624	kW
Power input compressor VD (1)	110	119	137	158	176	200	kW
Total power input VD (1)	124	134	155	176	197	221	kW
EER VD (1)	2.82	2.78	2.83	2.80	2.83	2.82	-
Water flow rate VD (1)	16.7	17.8	20.9	23.6	26.6	29.8	l/s
Water pressure drop VD (1)	51	53	57	60	58	56	kPa
Recovered heating capacity (1)	87.7	93.4	110	123	139	156	kW
Recovered water flow rate (1)	4.19	4.46	5.24	5.90	6.66	7.45	l/s
Recovered water pressure drop (1)	24	27	25	32	31	39	kPa

(1): The data refer to: Water temperature: evaporator inlet **:12°C** - evaporator outlet: **7°C,** Outdoor air temperature **35°C**.
The data refer to: Water temperature: recovery inlet :**40°C** - recovery outlet: **45°C.**

Acoustic Version: AX (Extra low noise Unit)

Recovery heat exchanger specifications

MODEL	350.5	390.6	440.6	490.6	560.6	630.6	UM
Type of recovery exchanger	Brazed plates						-
Quantity	1						N°
Max. operating pressure on wet side	600						kPa
Total water content of recovery exchangers	3.8	3.8	3.8	3.8	3.8	3.8	l
Unit specification							
Cooling capacity VD(1)	343	366	430	483	546	612	kW
Power input compressor VD (1)	113	123	141	163	180	206	kW
Total power input VD (1)	128	138	159	181	202	227	kW
EER VD (1)	2.68	2.65	2.70	2.67	2.70	2.70	-
Water flow rate VD (1)	16.4	17.5	20.5	23.1	26.1	29.2	l/s
Water pressure drop VD (1)	49	51	55	58	56	53	kPa
Recovered heating capacity (1)	87.7	93.4	110	123	139	156	kW
Recovered water flow rate (1)	4.19	4.46	5.26	5.88	6.64	7.45	l/s
Recovered water pressure drop (1)	24	27	25	32	31	39	kPa

(1): The data refer to: Water temperature: evaporator inlet **:12°C** - evaporator outlet: **7°C,** Outdoor air temperature **35°C**.
The data refer to: Water temperature: recovery inlet :**40°C** - recovery outlet: **45°C.**

GENERAL SPECIFICATIONS - VERSION WITH DESUPERHEATER (VD)
IR COOLING UNIT ONLY

Performances Version with Desuperheater (VD)

MOD.	TWR	OUTDOOR AIR TEMPERATURE (°C D.B.)				
		25	30	35	40	45
		kWtr = Recovered HEATING CAPACITY [kW]				
350.5	30	73.6	83.7	95.3	108	123
	35	73.1	83.2	94.7	108	122
	40	71.2	80.9	92.2	105	119
	45	67.7	77.0	**87.7**	99.5	113
	50	62.7	71.3	81.2	92.2	104
	55	56.1	63.9	72.8	82.6	93.5
	60	48.1	54.7	62.3	70.7	80.1
	65	38.5	43.8	49.9	56.7	64.2
	70	27.4	31.2	35.5	40.3	45.7
390.6	30	79.0	89.6	102	115	131
	35	78.6	89.1	101	115	130
	40	76.4	86.7	98.4	112	126
	45	72.6	82.3	**93.4**	106	120
	50	66.9	75.9	86.2	97.7	111
	55	59.6	67.6	76.7	87.0	98.4
	60	50.5	57.3	65.0	73.8	83.4
	65	39.7	45.1	51.1	58.0	65.6
	70	27.2	30.9	35.0	39.7	44.9
440.6	30	92.3	105	120	136	154
	35	91.7	104	119	135	153
	40	89.3	102	116	131	149
	45	84.9	96.6	**110**	125	141
	50	78.6	89.4	102	116	131
	55	70.4	80.1	91.3	104	117
	60	60.3	68.6	78.2	88.7	100
	65	48.3	55.0	62.6	71.1	80.5
	70	34.4	39.1	44.6	50.6	57.3
490.6	30	104	118	134	152	172
	35	104	117	133	151	171
	40	101	114	130	147	166
	45	95.5	108	**123**	139	158
	50	88.2	100	113	129	146
	55	78.5	89.0	101	115	130
	60	66.5	75.5	85.7	97.1	110
	65	52.3	59.3	67.4	76.4	86.4
	70	35.8	40.6	46.1	52.3	59.2
560.6	30	117	132	150	170	193
	35	117	132	150	170	193
	40	114	129	147	166	188
	45	108	122	**139**	158	178
	50	99.2	112	128	145	164
	55	87.5	99.1	113	128	144
	60	72.8	82.5	93.7	106	120
	65	55.2	62.5	71.0	80.5	91.0
	70	34.6	39.2	44.6	50.5	57.1
630.6	30	130	148	168	190	215
	35	130	148	168	191	215
	40	127	145	164	186	210
	45	121	137	**156**	177	199
	50	111	126	143	162	183
	55	97.6	111	126	143	161
	60	80.8	91.9	104	118	133
	65	60.7	69.0	78.4	88.7	100
	70	37.2	42.2	48.0	54.3	61.2

Twr= Recovery outlet water temperature °C - Evaporator outlet water temperature = 7°C.
The standard performances refer to a 5°C temperature difference between the water entering and leaving the heat exchanger and to operation of the unit with all fans at nominal or maximum speed. A 0.44 x 10^{-4} m^2 K/W fouling factor has also been considered with the unit installed at zero meters above sea level (Pb = 1013mbar).

GENERAL SPECIFICATIONS - VERSION WITH DESUPERHEATER (VD)
IP HEAT PUMP UNIT

Acoustic Version: AB (Standard Unit)

Recovery heat exchanger specifications

MODEL	350.5	390.6	440.6	490.6	560.6	630.6	UM
Type of recovery exchanger	Brazed plates						-
Quantity	1						N°
Max. operating pressure on wet side	600						kPa
Total water content of recovery exchangers	1.3	1.3	1.3	1.3	1.3	1.3	l
Unit specification							
Cooling capacity VD(1)	355	379	443	499	562	632	kW
Power input compressor VD (1)	101	109	126	145	161	183	kW
Total power input VD (1)	115	123	144	163	183	205	kW
EER VD (1)	3.09	3.08	3.08	3.06	3.07	3.08	-
Water flow rate VD (1)	16.9	18.1	21.2	23.9	26.8	30.2	l/s
Water pressure drop VD (1)	52	55	58	62	59	57	kPa
Recovered heating capacity (1)	85.2	90.7	106	120	135	152	kW
Recovered water flow rate (1)	4.07	4.33	5.06	5.73	6.45	7.26	l/s
Recovered water pressure drop (1)	23	26	24	30	29	36	kPa

(1): The data refer to: Water temperature: evaporator inlet **:12°C** - evaporator outlet: **7°C,** Outdoor air temperature **35°C**.
The data refer to: Water temperature: recovery inlet :**40°C** - recovery outlet: **45°C.**

NOTE : THE HEATING CAPACITY RECOVERED BY THE DESUPERHEATER EXCLUSIVELY REFERS TO UNITS OPERATING IN THE COOLING MODE.

Acoustic Version: AS (Low noise Unit)

Recovery heat exchanger specifications

MODEL	350.5	390.6	440.6	490.6	560.6	630.6	UM
Type of recovery exchanger	Brazed plates						-
Quantity	1						N°
Max. operating pressure on wet side	600						kPa
Total water content of recovery exchangers	3.8	3.8	3.8	3.8	3.8	3.8	l
Unit specification							
Cooling capacity VD(1)	340	363	425	479	539	607	kW
Power input compressor VD (1)	109	117	136	156	174	198	kW
Total power input VD (1)	123	132	154	174	195	219	kW
EER VD (1)	2.76	2.75	2.76	2.75	2.76	2.77	-
Water flow rate VD (1)	16.2	17.3	20.3	22.9	25.7	29.0	l/s
Water pressure drop VD (1)	48	50	54	57	54	53	kPa
Recovered heating capacity (1)	85.2	90.7	107	120	135	152	kW
Recovered water flow rate (1)	4.07	4.33	5.09	5.72	6.45	7.25	l/s
Recovered water pressure drop (1)	23	26	24	30	29	36	kPa

(1): Dati riferiti a: Temperatura acqua: ingresso evaporatore :**12°C** - uscita evaporatore: **7°C,** Temperatura aria esterna **35°C.**
Dati riferiti a: Temperatura acqua: ingresso recupero:**40°C** - uscita recupero: **45°C.**

NOTE : THE HEATING CAPACITY RECOVERED BY THE DESUPERHEATER EXCLUSIVELY REFERS TO UNITS OPERATING IN THE COOLING MODE.

Acoustic Version: AX (Extra low noise Unit)

Recovery heat exchanger specifications

MODEL	350.5	390.6	440.6	490.6	560.6	630.6	UM
Type of recovery exchanger	Brazed plates						-
Quantity	1						N°
Max. operating pressure on wet side	600						kPa
Total water content of recovery exchangers	3.8	3.8	3.8	3.8	3.8	3.8	l
Unit specification							
Cooling capacity VD(1)	334	356	416	469	528	595	kW
Power input compressor VD (1)	112	120	140	160	178	204	kW
Total power input VD (1)	126	135	158	178	200	225	kW
EER VD (1)	2.65	2.64	2.63	2.63	2.64	2.64	-
Water flow rate VD (1)	16.0	17.0	19.9	22.4	25.2	28.4	l/s
Water pressure drop VD (1)	47	48	51	54	52	51	kPa
Recovered heating capacity (1)	85.2	90.7	106	120	135	152	kW
Recovered water flow rate (1)	4.07	4.33	5.06	5.73	6.45	7.26	l/s
Recovered water pressure drop (1)	23	26	24	30	29	36	kPa

(1): The data refer to: Water temperature: evaporator inlet **:12°C** - evaporator outlet: **7°C,** Outdoor air temperature **35°C**.
The data refer to: Water temperature: recovery inlet :**40°C** - recovery outlet: **45°C.**

NOTE : THE HEATING CAPACITY RECOVERED BY THE DESUPERHEATER EXCLUSIVELY REFERS TO UNITS OPERATING IN THE COOLING MODE.

GENERAL SPECIFICATIONS - VERSION WITH DESUPERHEATER (VD)
IP HEAT PUMP UNIT

Performances Version with Desuperheater (VD)

MOD.	TWR	OUTDOOR AIR TEMPERATURE (°C D.B.)				
		25	30	35	40	45
		kWtr = Recovered HEATING CAPACITY [kW]				
350.5	30	71.5	81.3	92.6	105	119
	35	71.0	80.8	92.0	104	118
	40	69.1	78.6	89.6	102	115
	45	65.7	74.8	**85.2**	96.7	110
	50	60.9	69.3	78.9	89.6	101
	55	54.5	62.0	70.7	80.2	90.9
	60	46.7	53.1	60.5	68.7	77.8
	65	37.4	42.6	48.5	55.0	62.3
	70	26.6	30.3	34.5	39.2	44.4
390.6	30	76.7	87.0	98.8	112	127
	35	76.3	86.6	98.3	111	126
	40	74.2	84.2	95.6	108	123
	45	70.5	79.9	**90.7**	103	116
	50	65.0	73.7	83.7	94.9	107
	55	57.9	65.6	74.5	84.5	95.6
	60	49.1	55.6	63.2	71.6	81.0
	65	38.6	43.8	49.7	56.3	63.7
	70	26.4	30.0	34.0	38.6	43.6
440.6	30	88.9	101	115	131	148
	35	88.4	101	115	130	147
	40	86.0	97.8	111	127	143
	45	81.8	93.0	**106**	120	136
	50	75.8	86.2	98.2	111	126
	55	67.9	77.2	87.9	99.8	113
	60	58.1	66.1	75.3	85.5	96.8
	65	46.6	53.0	60.3	68.5	77.5
	70	33.1	37.7	42.9	48.7	55.2
490.6	30	102	115	131	148	168
	35	101	115	130	147	167
	40	98.2	111	126	143	162
	45	93.2	106	**120**	136	154
	50	86.0	97.5	111	126	142
	55	76.6	86.8	98.6	112	126
	60	64.9	73.6	83.6	94.8	107
	65	51.0	57.9	65.7	74.5	84.3
	70	35.0	39.6	45.0	51.0	57.7
560.6	30	116	132	150	170	192
	35	113	129	146	165	187
	40	111	125	142	161	182
	45	105	119	**135**	153	173
	50	96.4	109	124	141	159
	55	85.0	96.2	109	124	140
	60	70.7	80.1	91.0	103	117
	65	53.6	60.7	69.0	78.2	88.4
	70	33.6	38.1	43.3	49.1	55.5
630.6	30	130	148	168	190	214
	35	127	144	164	186	209
	40	124	141	160	181	204
	45	118	134	**152**	172	194
	50	108	123	140	158	178
	55	95.1	108	123	139	157
	60	78.8	89.5	102	115	130
	65	59.1	67.2	76.4	86.4	97.5
	70	36.2	41.1	46.7	52.9	59.7

Twr= Recovery outlet water temperature °C - Evaporator outlet water temperature = 7°C.
The standard performances refer to a 5°C temperature difference between the water entering and leaving the heat exchanger and to operation of the unit with all fans at nominal or maximum speed. A 0.44 x 10^{-4} m^2 K/W fouling factor has also been considered with the unit installed at zero meters above sea level (Pb = 1013mbar).

GENERAL SPECIFICATIONS - FULL HEAT RECOVERY UNIT (VR)
IP HEAT PUMP UNIT

Acoustic Version: AB (Basic Unit)

Recovery heat exchanger specifications

MODEL	350.5	390.6	440.6	490.6	560.6	630.6	UM
Type of recovery exchanger	Brazed plates						-
Quantity	1						N°
Max. operating pressure on wet side	600						kPa
Total water content of recovery exchangers	28.8	30.4	35.2	39.2	44.8	49.6	l
Unit specification							
Cooling capacity VR(1)	365	389	457	514	581	650	kW
Total power input VR (1)	101	109	126	145	161	184	kW
EER VR (1)	3.61	3.57	3.63	3.54	3.61	3.53	-
Water flow rate VR (1)	17.5	18.6	21.8	24.6	27.8	31.0	l/s
Water pressure drop VR (1)	56	58	62	65	63	60	kPa
Recovered heating capacity (1)	461	493	577	652	734	824	kW
Recovered water flow rate (1)	22.0	23.6	27.6	31.2	35.1	39.4	l/s
Recovered water pressure drop (1)	58	60	62	66	65	68	kPa

(1): The data refer to: Water temperature: evaporator inlet **:12°C** - evaporator outlet: **7°C,** Outdoor air temperature **35°C**.
The data refer to: Water temperature: recovery inlet :**40°C** - recovery outlet: **45°C.**

Acoustic Version: AS (Low noise Unit)

Recovery heat exchanger specifications

MODEL	350.5	390.6	440.6	490.6	560.6	630.6	UM
Type of recovery exchanger	Brazed plates						-
Quantity	1						N°
Max. operating pressure on wet side	600						kPa
Total water content of recovery exchangers	28.8	30.4	35.2	39.2	44.8	49.6	l
Unit specification							
Cooling capacity VR(1)	365	389	457	514	581	650	kW
Total power input VR (1)	101	109	126	145	161	184	kW
EER VR (1)	3.61	3.57	3.63	3.54	3.61	3.53	-
Water flow rate VR (1)	17.5	18.6	21.8	24.6	27.8	31.0	l/s
Water pressure drop VR (1)	56	58	62	65	63	60	kPa
Recovered heating capacity (1)	461	493	577	652	734	824	kW
Recovered water flow rate (1)	22.0	23.6	27.6	31.2	35.1	39.4	l/s
Recovered water pressure drop (1)	58	60	62	66	65	68	kPa

(1): The data refer to: Water temperature: evaporator inlet **:12°C** - evaporator outlet: **7°C,** Outdoor air temperature **35°C**.
The data refer to: Water temperature: recovery inlet :**40°C** - recovery outlet: **45°C.**

Acoustic Version: AX (Extra Low noise Unit)

Recovery heat exchanger specifications

MODEL	350.5	390.6	440.6	490.6	560.6	630.6	UM
Type of recovery exchanger	Brazed plates						-
Quantity	1						N°
Max. operating pressure on wet side	600						kPa
Total water content of recovery exchangers	28.8	30.4	35.2	39.2	44.8	49.6	l
Unit specification							
Cooling capacity VR(1)	365	389	457	514	581	650	kW
Total power input VR (1)	101	109	126	145	161	184	kW
EER VR (1)	3.61	3.57	3.63	3.54	3.61	3.53	-
Water flow rate VR (1)	17.5	18.6	21.8	24.6	27.8	31.0	l/s
Water pressure drop VR (1)	56	58	62	65	63	60	kPa
Recovered heating capacity (1)	461	493	577	652	734	824	kW
Recovered water flow rate (1)	22.0	23.6	27.6	31.2	35.1	39.4	l/s
Recovered water pressure drop (1)	58	60	62	66	65	68	kPa

(1): The data refer to: Water temperature: evaporator inlet **:12°C** - evaporator outlet: **7°C,** Outdoor air temperature **35°C**.
The data refer to: Water temperature: recovery inlet :**40°C** - recovery outlet: **45°C.**

GENERAL SPECIFICATIONS - FULL HEAT RECOVERY UNIT (VR)
IP HEAT PUMP UNIT

Full Heat recovery unit performances (VR)

MOD.	TWE	OUTDOOR AIR TEMPERATURE (°C D.B.)				
		35	40	45	50	55
		kWtr = Recovered HEATING CAPACITY [kW]				
350.5	5	466	453	439	425	410
	6	478	464	449	434	420
	7	490	476	**461**	445	430
	8	503	488	472	456	440
	9	515	500	484	467	450
	10	527	512	495	477	460
	11	540	523	506	488	470
	12	553	536	518	499	480
390.6	5	498	484	470	455	439
	6	511	496	481	465	449
	7	524	509	**493**	476	460
	8	537	522	505	488	471
	9	551	534	517	499	482
	10	564	547	529	511	492
	11	577	559	541	522	503
	12	591	573	554	534	514
440.6	5	583	566	549	531	513
	6	597	580	562	543	524
	7	613	595	**576**	556	537
	8	629	610	590	570	550
	9	644	625	604	583	562
	10	659	639	618	597	575
	11	675	654	632	610	587
	12	691	670	647	624	600
490.6	5	659	640	621	601	581
	6	675	656	636	615	594
	7	692	672	**651**	630	608
	8	710	689	668	645	623
	9	728	706	684	660	637
	10	745	723	699	675	651
	11	762	739	715	690	665
	12	781	757	732	706	680
560.6	5	742	721	699	676	653
	6	760	738	716	692	668
	7	780	757	**734**	709	684
	8	800	776	752	726	700
	9	820	795	770	743	716
	10	839	814	787	760	732
	11	859	833	805	776	748
	12	880	853	824	795	765
630.6	5	833	810	785	760	735
	6	854	829	804	778	751
	7	876	851	**824**	797	769
	8	898	872	845	816	788
	9	920	893	865	835	806
	10	942	914	885	854	823
	11	964	935	904	873	841
	12	988	958	926	893	860

Twe= Evaporator outlet water temperature °C **Twr=** Recovery outlet water temperature °C

The standard performances refer to a 5°C temperature difference between the water entering and leaving the heat exchanger and to operation of the unit with all fans at nominal or maximum speed. A 0.44 x 10^{-4} m^2 K/W fouling factor has also been considered with the unit installed at zero meters above sea level (Pb = 1013mbar).

NOISE LEVELS

The noise levels refer to units operating in the nominal conditions (water temperature: inlet: 12°C - outlet: 7°C, Outdoor air temperature: inlet: 30°C - outlet: 35°C).
The acoustic pressure levels are measured 1/ 5 / 10 meters away from the outer surface of the unit operating in the free field and resting on a reflecting surface (directional factor of 2).

SWL = Sound power levels, with reference to $1x10^{-12}$ W.
The Total sound power level in **dB(A)** measured in compliance with **ISO 9614** standards, is certified according to the **Eurovent** certification program and it is the only mandatory value (the values of octave band in the table are indicative).
Eurovent certification **(E)** exclusively refers to the **Total** Sound Power in **db(A)**, which is therefore the only binding acoustic specification (the values of the Octave bands in the table are indicative).

SPL = Sound pressure levels, with reference to $2x10^{-5}$ Pa.
The sound pressure levels are values calculated by applying the **ISO-3744 relation (Eurovent 8/1)** and refer to a distance of 1 meter away from the external surface of units operating in the open field with directivity factor 2 (Q=2) and the units operating in nominal conditions in the cooling mode.

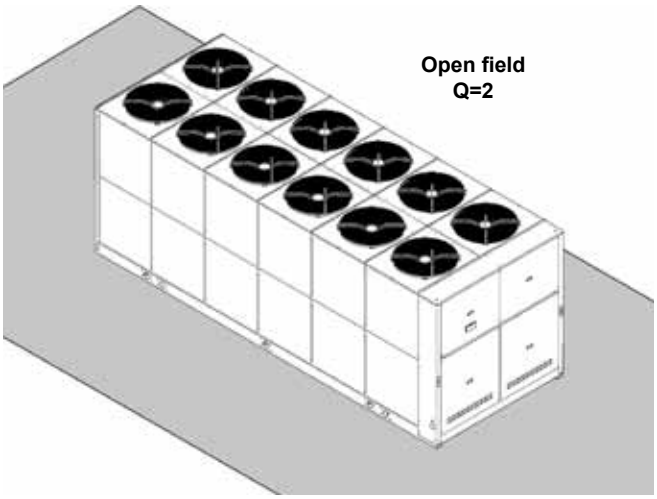

Standard Unit AB

MOD.	SWL (dB)										SPL [dB(A)]		
	Octave bands (Hz)								Total				
	63	125	250	500	1000	2000	4000	8000	dB	dB(A)(E)	1 m	5 m	10 m
350.5	99.2	95.5	95.4	93.0	90.2	85.5	80.1	72.0	**103**	**95**	75	67	63
390.6	99.2	95.5	95.4	93.0	90.2	85.5	80.1	72.0	**103**	**95**	75	67	63
440.6	100.4	98.2	95.8	93.4	90.9	87.9	80.1	70.6	**104**	**96**	76	68	64
490.6	100.4	98.2	95.8	93.4	90.9	87.9	80.1	70.6	**104**	**96**	76	68	64
560.6	101.4	99.2	96.8	94.4	91.9	88.9	81.1	71.6	**105**	**97**	77	69	65
630.6	101.4	99.2	96.8	94.4	91.9	88.9	81.1	71.6	**105**	**97**	77	69	65

Low noise unit AS

MOD.	SWL (dB)										SPL [dB(A)]		
	Octave bands (Hz)								Total				
	63	125	250	500	1000	2000	4000	8000	dB	dB(A)(E)	1 m	5 m	10 m
350.5	95.4	93.0	90.8	86.3	83.4	79.8	71.3	62.0	**99**	**89**	69	61	57
390.6	95.4	93.0	90.8	86.3	83.4	79.8	71.3	62.0	**99**	**89**	69	61	57
440.6	95.1	91.2	90.3	88.2	85.1	80.0	73.4	65.9	**98**	**90**	70	62	58
490.6	95.1	91.2	90.3	88.2	85.1	80.0	73.4	65.9	**98**	**90**	70	62	58
560.6	96.1	92.2	91.3	89.2	86.1	81.0	74.4	66.9	**99**	**91**	71	63	59
630.6	96.1	92.2	91.3	89.2	86.1	81.0	74.4	66.9	**99**	**91**	71	63	59

Extra low moise unit AX

MOD.	SWL (dB)										SPL [dB(A)]		
	Octave bands (Hz)								Total				
	63	125	250	500	1000	2000	4000	8000	dB	dB(A)(E)	1 m	5 m	10 m
350.5	92.4	90.0	87.8	83.3	80.4	76.8	68.3	59.0	**96**	**86**	66	58	54
390.6	92.4	90.0	87.8	83.3	80.4	76.8	68.3	59.0	**96**	**86**	66	58	54
440.6	94.2	91.9	89.4	85.3	81.0	74.6	67.0	58.6	**97**	**87**	67	59	55
490.6	94.2	91.9	89.4	85.3	81.0	74.6	67.0	58.6	**97**	**87**	67	59	55
560.6	92.4	90.1	88.6	86.0	83.3	77.8	71.2	62.8	**96**	**88**	68	60	56
630.6	92.4	90.1	88.6	86.0	83.3	77.8	71.2	62.8	**96**	**88**	68	60	56

(E): Data declared according to **EUROVENT LCP** certification programme. The values are for units without options and accessories.

OPERATING RANGE

Operating range

The table below lists the operating ranges within which correct operation of the units is guaranteed, depending on the Version and Operating Mode available for each type of unit.
Remember that in Heat Pump units, heat recovery only takes place during operation in the cooling mode.

Operating range of Standard unit

Thermal gradient of the water*		Limit value
Minimum	°C	3
Maximum	°C	8

IN COOLING MODE

UNIT MEDIUM TEMPERATURE - 0 M 5

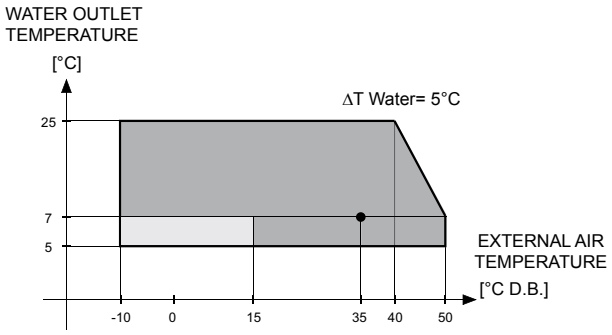

UNIT HIGH TEMPERATURE - 0 A 5

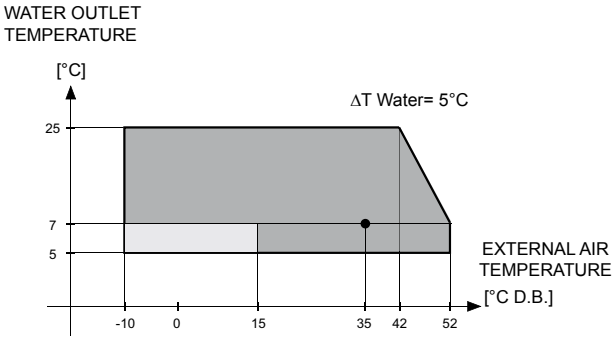

With accessory Head pressure control (brine is recommended)

IN HEATING MODE

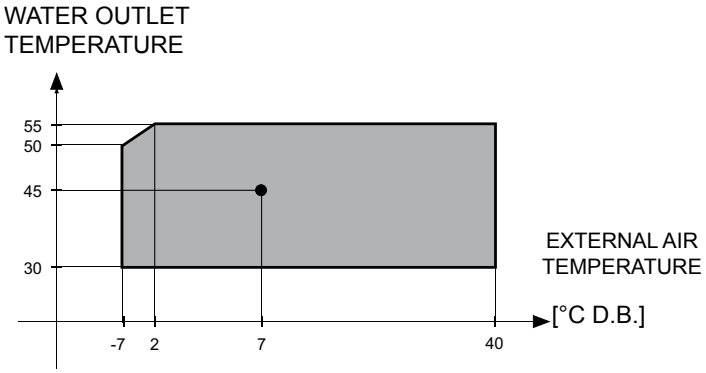

BRINE UNIT BR - BP - IN COOLING MODE

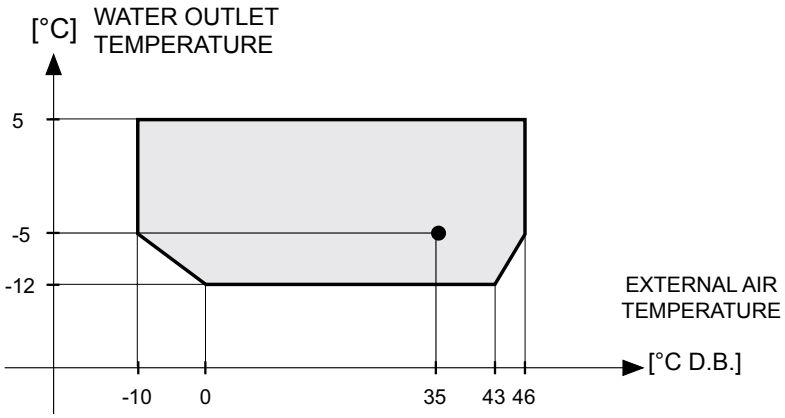

WATER PRESSURE DROP EVAPORATOR

The graph below illustrates for the evaporator the water pressure drop values in kPa depending on the flow rate in liters/second. The operating range is delimited by the minimum and maximum values given in the next table.

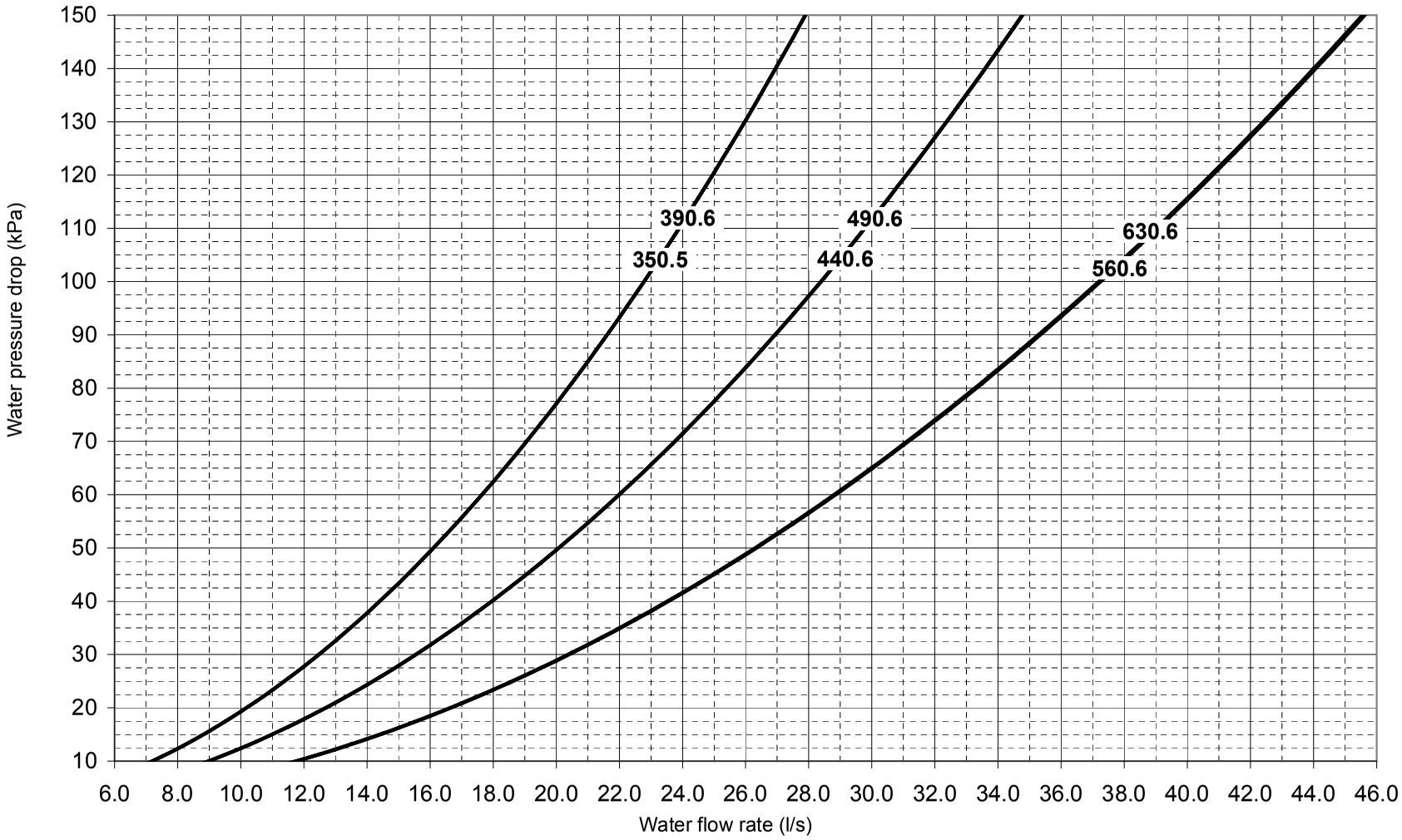

Operating range

Unit size		350.5	390.6	440.6	490.6	560.6	630.6	UM	NOTES
Lower limit value	Q	7.20	7.20	8.98	8.98	11.76	11.78	l/s	**Q**= Water flow rate **ΔP**= Water pressure drop
	Δp	10						kPa	
Upper limit value	Q	21.4	21.4	26.4	26.3	34.7	34.7	l/s	
	Δp	150						kPa	

WATER PRESSURE DROP DESUPERHEATER

The graph below illustrates for the desuperheater the water pressure drop values in kPa depending on the flow rate in liters/second.
The operating range is delimited by the minimum and maximum values given in the next table.

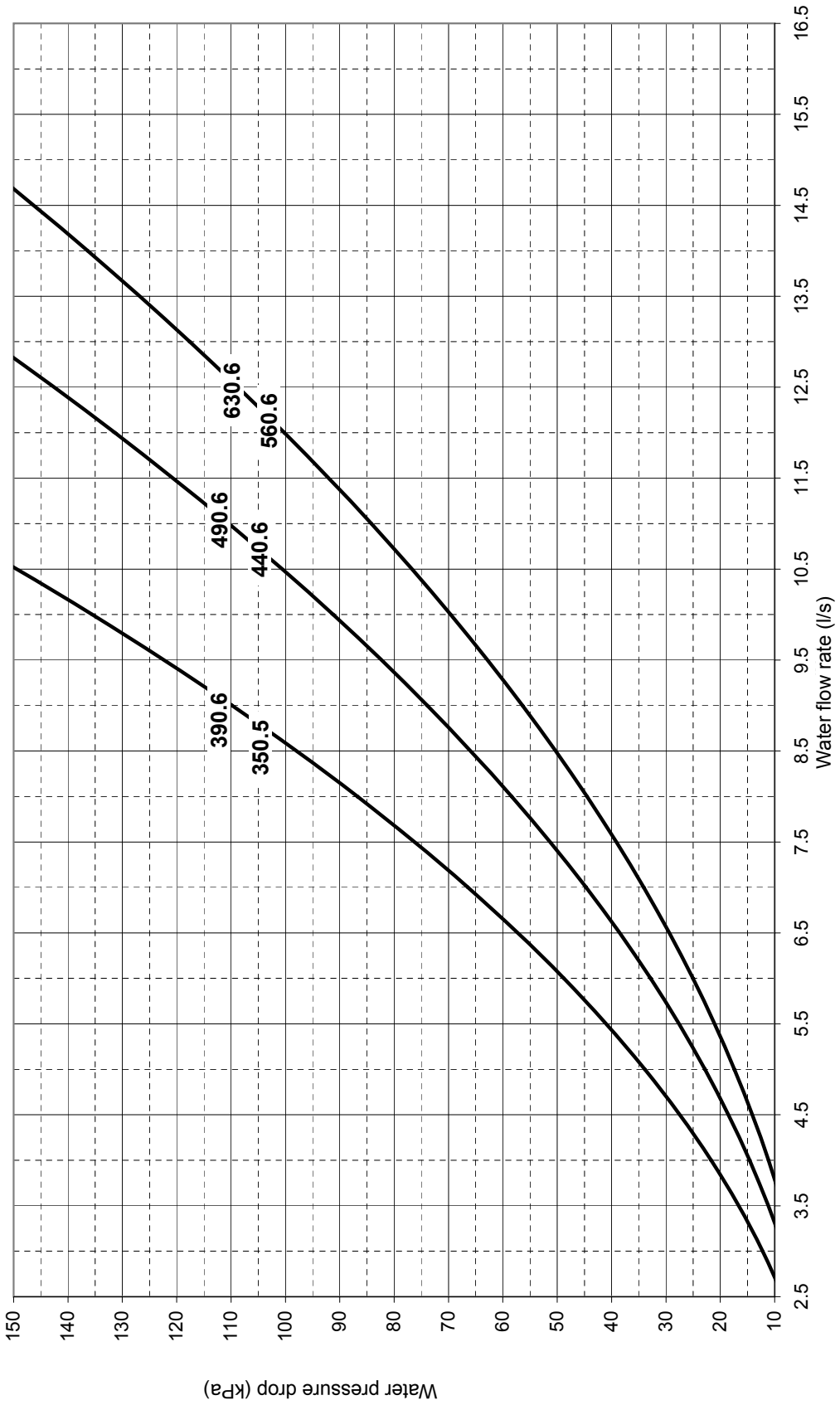

Operating range

Unit size		350.5	390.6	440.6	490.6	560.6	630.6	UM	NOTES
Lower limit value	Q	2.72	2.72	3.31	3.31	3.79	3.79	l/s	**Q**= Water flow rate **ΔP**= Water pressure drop
	Δp	10						kPa	
Upper limit value	Q	10.5	10.5	12.8	12.8	14.7	14.7	l/s	
	Δp	150						kPa	

WORKING HEAD OF THE PUMPING MODULE MP AM STD AND MP SS STD

The graph below illustrates for the evaporator the water pressure drop values in kPa depending on the flow rate in liters/second. The operating range is delimited by the minimum and maximum values given in the next table.

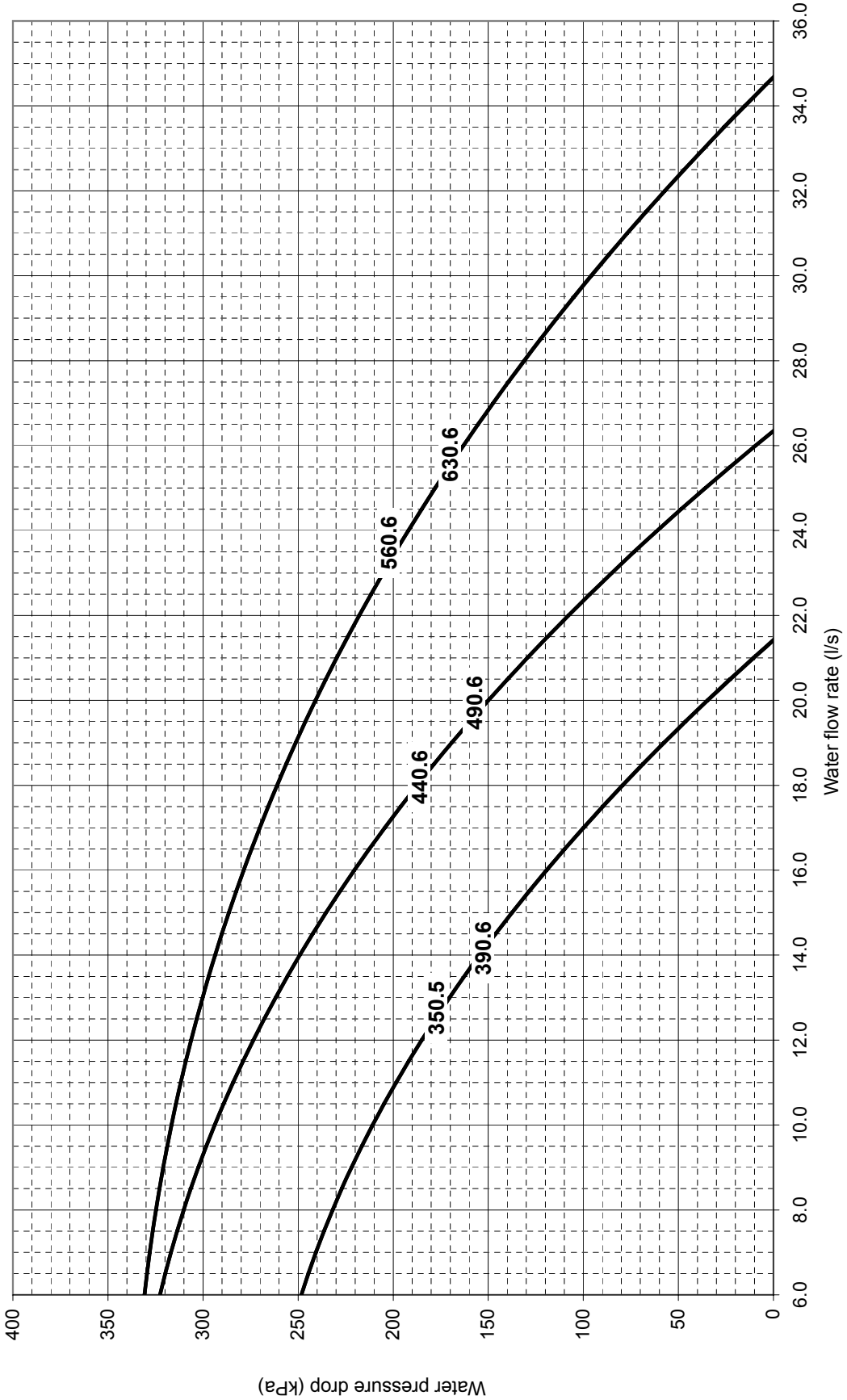

Operating range

Unit size		350.5	390.6	440.6	490.6	560.6	630.6	UM	NOTE
Lower limit value	**Q**	7.20	7.20	8.98	8.98	11.76	11.78	l/s	**Q**= Water flow rate
Upper limit value	**Q**	24.7	24.7	28.2	28.2	38.4	38.4	l/s	

HIGH WORKING HEAD OF THE PUMPING MODULE MP AM HP1 AND MP SS HP1

The graph below illustrates for the evaporator the water pressure drop values in kPa depending on the flow rate in liters/second. The operating range is delimited by the minimum and maximum values given in the next table.

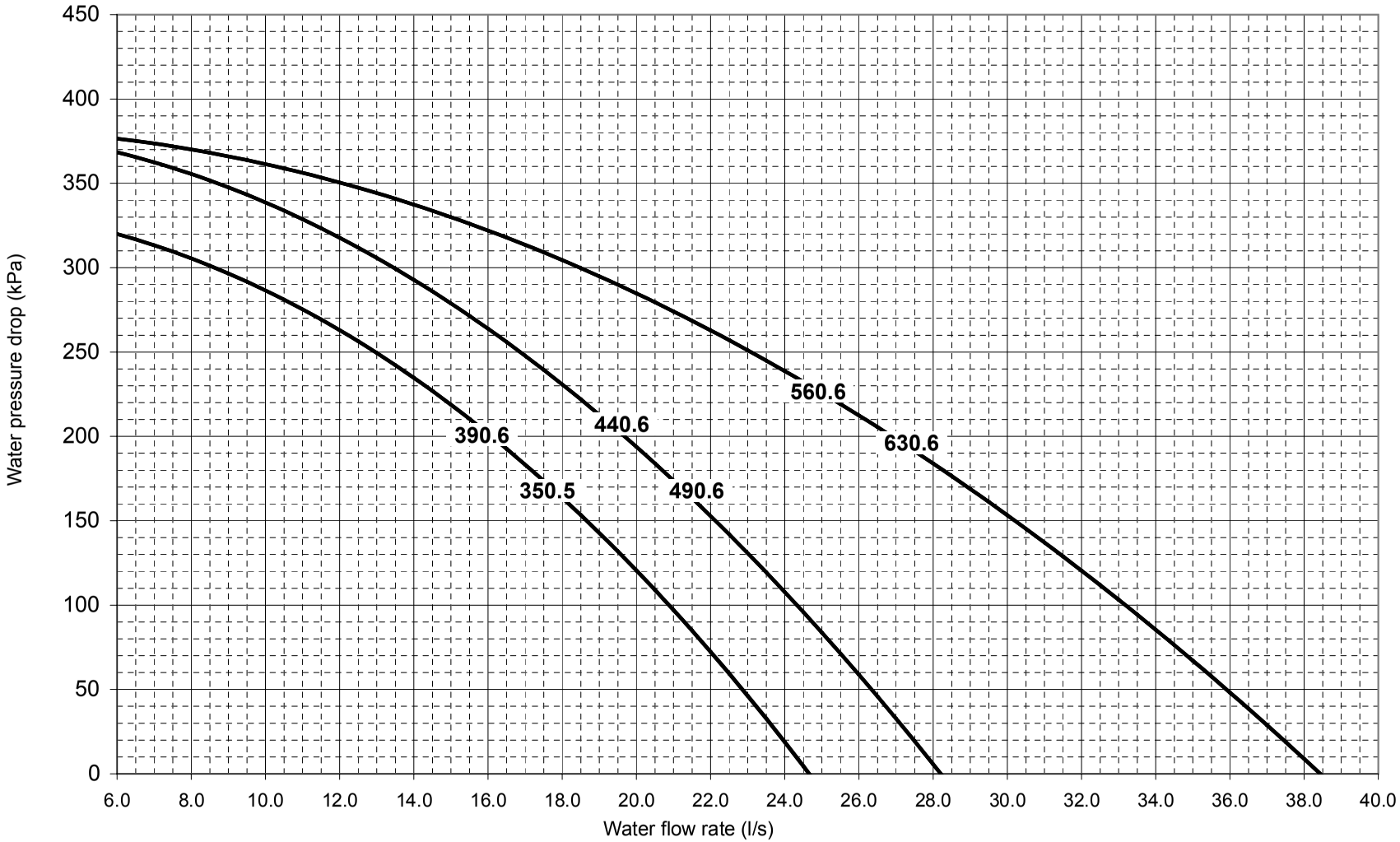

Operating range

Unit size		350.5	390.6	440.6	490.6	560.6	630.6	UM	NOTE
Lower limit value	**Q**	7.20	7.20	8.98	8.98	11.76	11.78	l/s	**Q**= Water flow rate
Upper limit value	**Q**	21.4	21.4	26.4	26.3	34.7	34.7	kPa	

RECEPTION AND POSITIONING

Inspections on arrival

As soon as the appliance is consigned, it is essential to make sure that all the ordered items have been received and that the shipment is complete. Carefully check that the equipment has not been damaged. If visible damage is discovered, immediately inform the haulage contractor and write “Collected with reserves owing to evident damage” on the consignment note.
Delivery ex works means that, as established by law, reimbursement of any damages is at the insurance company’s charge.

Safety prescriptions

Comply with the current safety regulations concerning the equipment to use when handling the unit or the required ways of operating.

Handling

Check the weight of the appliance before proceeding with the moving and handling operations. The weight is indicated on the data plate of the appliance and in the WEIGHTS AND CENTERS OF GRAVITY DURING TRASPORT AND OPERATION section of this manual. Make sure that the appliance is handled with care and without jolting as rough treatment could damage the functional parts of the machine.
Comply with the following instructions when lifting and positioning the appliance:
• Handling and lifting with a crane or similar

1) Using the brackets (Part 1 Fig.1) located by the lifting holes (refer to part 3 in the “Dimensional data” section).

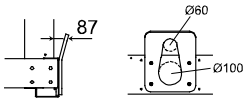

2) Position metal pipes (Part 2 Fig.1) of adequate thickness in the holes in the base of the unit for lifting.
• The end portions of the pipes must stand out by an adequate extent to permit inserting the safety devices and housing the belts for lifting.
• Use spacer bars in the top of the unit to prevent crushing and damaging the batteries and the parts intended to cover the assembly.

• Consult the WEIGHTS AND CENTERS OF GRAVITY DURING TRASPORT AND OPERATION section for the center of gravity position.
NOTE: To correctly lift the machine, the belts used must be longer than 3.5 meters.
Refer to the data plates (Part.3 Fig.1) that identify the center of gravity position, applied to the 4 sides of the base.

Fig. 1

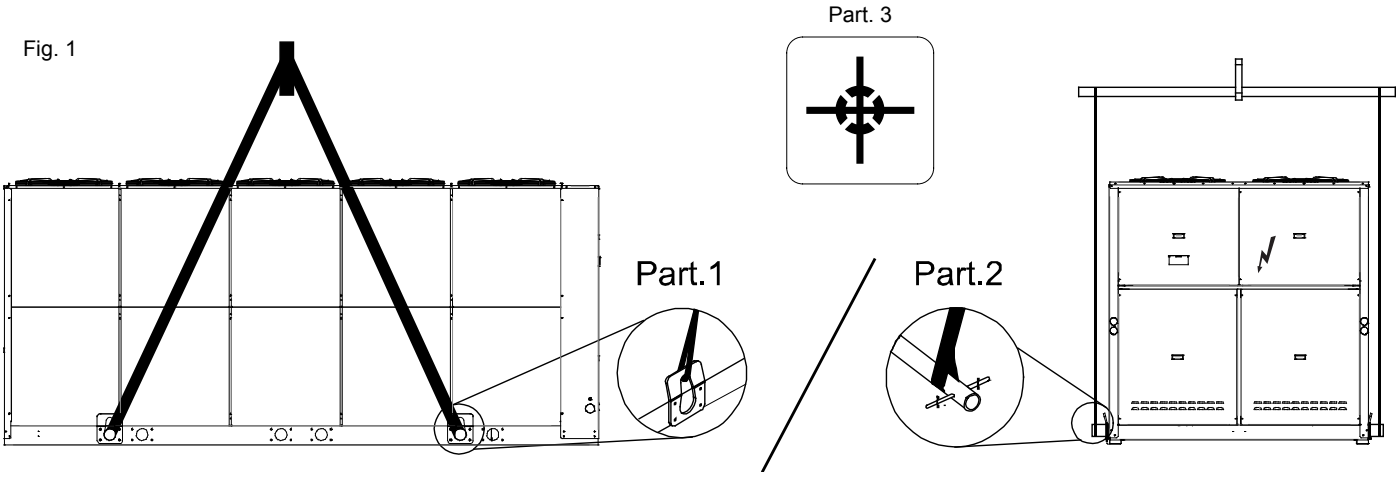

WARNING:
To safeguard persons and property, read the information on the packing that covers the unit before handling. Also make sure to:
• Handle the machine with care
• Do not stack other objects on top of the unit

Storage

The units must be stored in a dry place, sheltered from the sun, rain, sand and wind.
Comply with the storage conditions given below:
• Do not stack the units
• Maximum temperature = 60°C
• Minimum temperature = -10°C
• Humidity = 90%

DIMENSIONAL DATA

Overall dimensions

Mod. 350.5 ÷ 490.6

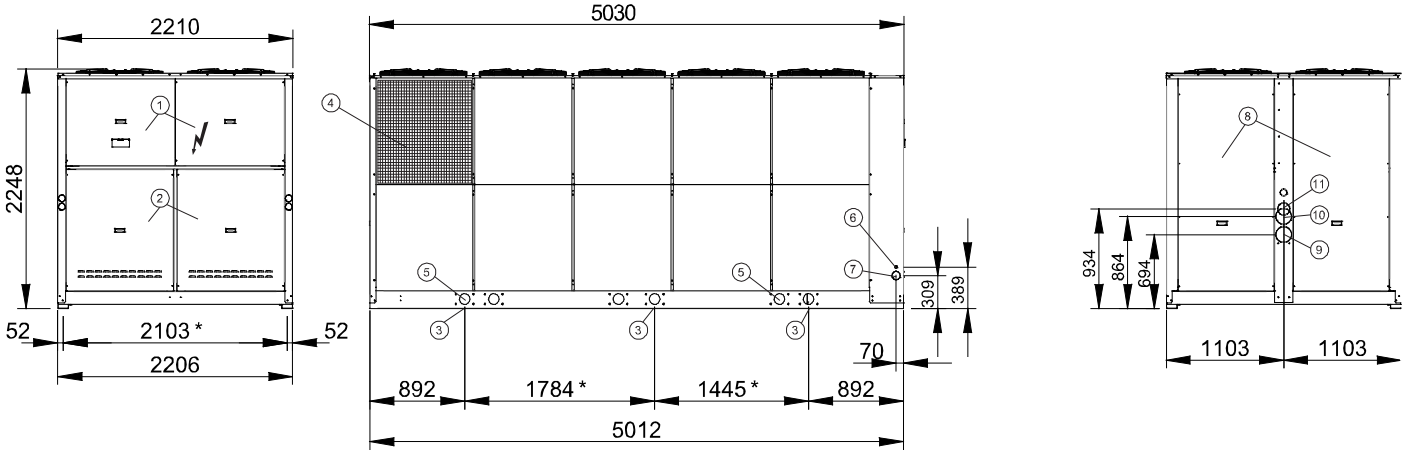

Mod. 560.6 ÷ 630.6

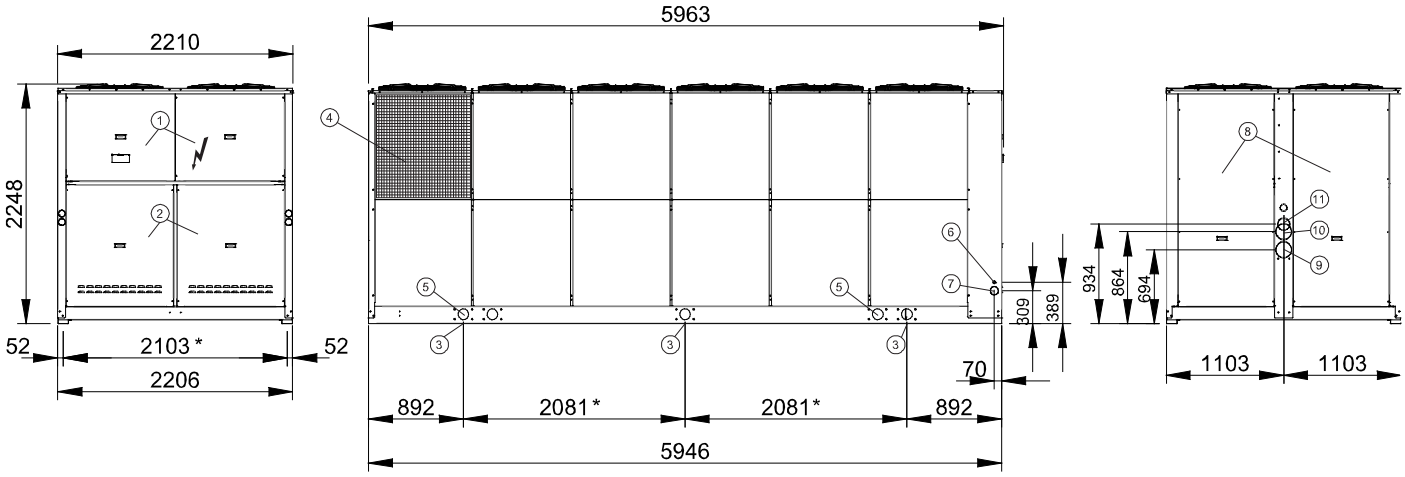

Description of the components

1 - Access panel to electric panel's power section
2 - Access panel to compressor compartment
3 - Vibration damper fixing holes (6 pcs)
4 - Coil protection grilles (accessory)
5 - ø 100 mm lifting holes
6 - ø 22 mm input hole for accessory cables
7- ø 79 mm hole for electric power supply input
8 - Access panel to pump compartment
9 - Water inlet AM PS SS
10 - Water outlet AM PS
11 - Water outlet SS
*** :** Center distance of vibration damper holes

VICTAULIC CONNECTION KIT

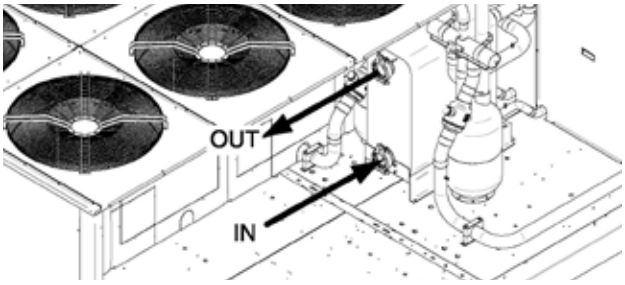

	KT ATTACCHI VICTAULIC		KIT TUBI COMPLETO / KIT TUBI CON SERBATOIO				MP AM MP PS				MP SS			
	IN	OUT	IN		OUT		IN		OUT		IN		OUT	
Mod.	**Ø**	**Ø**	**Ø**	**Rif.**	**Ø**	**Rif.**	**Ø**	**Rif.**	**Ø**	**Rif.**	**Ø**	**Rif.**	**Ø**	**Rif.**
350.5	4"	4"	4"	9	4"	11	4"	9	4"	10	4"	9	4"	11
390.6														
440.6														
490.6														
560.6	5"	5"	5"		5"		5"		5"		5"		5"	
630.6														

Ø	DN	Tipo
4"	DN100	Victaulic
5"	DN125	Victaulic

DIMENSIONAL DATA

Minimum space required for operation

To correctly install the unit, comply with the measurements for the free area that must be left around the machine, as shown in the figure.
This will ensure good air circulation, allow the unit to operate correctly and facilitate future maintenance work.
The distances must be doubled if the unit is to be installed in a pit.
NOTE. Allow for an uncluttered area of not less than 2.5 meters above the unit.

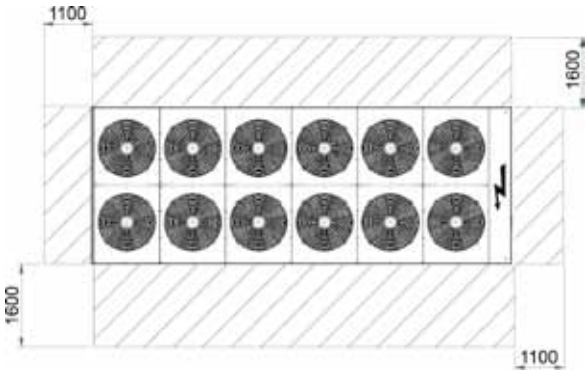

Vibration-damper installation

To prevent the operating unit from transmitting vibrations to the bearing structure, vibration dampening materials should be inserted under the bearing points.
The unit can be supplied with the rubber or spring vibration dampening accessory. This must be mounted by the installer.

Area of support

Mod. 350.5 ÷ 490.6

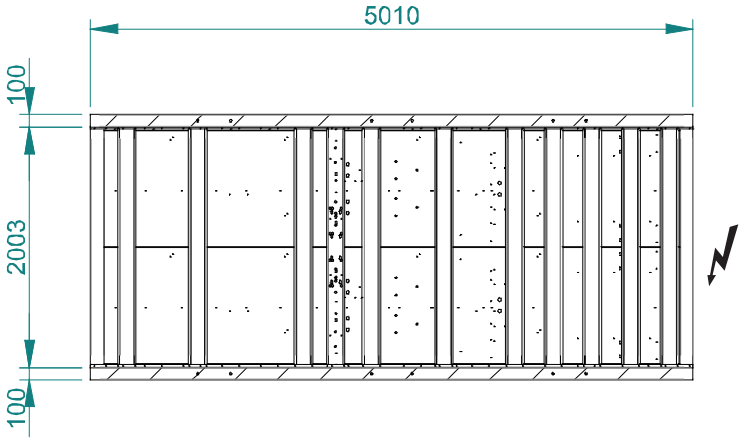

Mod. 560.6 ÷ 630.6

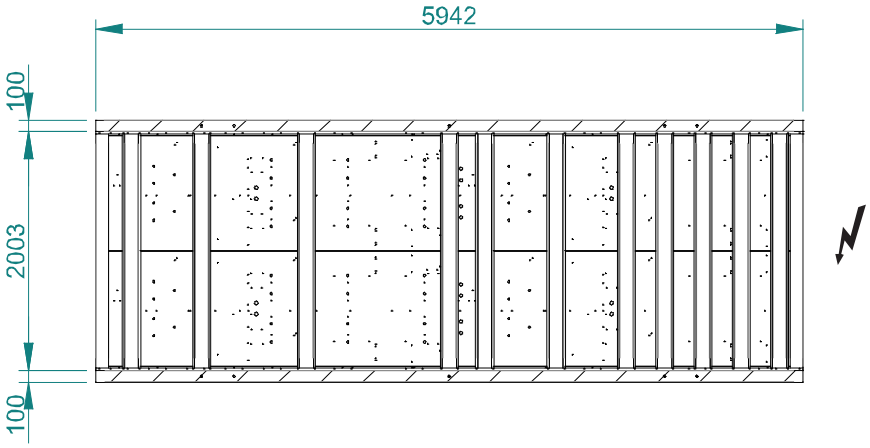

WEIGHT DURING OPERATION AND TRANSPORT

Weight during transport

To correctly install the unit, comply with the measurements for the free area that must be left around the machine, as shown in the drawing.

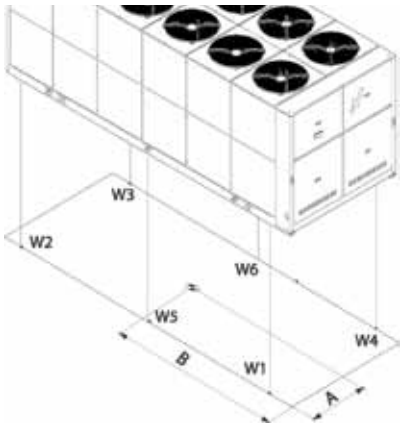

UNIT **WITHOUT** WATER STORAGE TANK

Unit WITHOUT Hydronic Kit

IR Version

Acustic version	AB-AS			AX		
Mod.	Center of gravity position [mm]		Weight [Kg]	Center of gravity position [mm]		Weight [Kg]
	A	B		A	B	
350.5	1141	1720	3089	1140	1742	3190
390.6	1115	1699	3280	1114	1721	3383
440.6	1130	1699	3337	1129	1721	3441
490.6	1114	1696	3409	1113	1718	3513
560.6	1131	1939	3647	1130	1961	3754
630.6	1115	1936	3719	1114	1958	3826

IP Version

Acustic version	AB-AS			AX		
Mod.	Center of gravity position [mm]		Weight [Kg]	Center of gravity position [mm]		Weight [Kg]
	A	B		A	B	
350.5	1140	1738	3306	1139	1760	3406
390.6	1114	1717	3510	1113	1739	3613
440.6	1129	1717	3571	1128	1739	3674
490.6	1113	1714	3648	1112	1736	3752
560.6	1130	1957	3902	1129	1979	4009
630.6	1114	1954	3979	1113	1976	4087

Unit WITH Hydronic Kit

IR Version

Acustic version	AB-AS			AX		
Mod.	Center of gravity position [mm]		Weight [Kg]	Center of gravity position [mm]		Weight [Kg]
	A	B		A	B	
350.5	1132	2011	3459	1131	2033	3564
390.6	1106	1990	3650	1105	2012	3756
440.6	1121	1990	3707	1120	2012	3814
490.6	1105	1987	3779	1104	2009	3887
560.6	1123	2279	4034	1122	2301	4144
630.6	1107	2276	4106	1106	2298	4217

IP Version

Acustic version	AB-AS			AX		
Mod.	Center of gravity position [mm]		Weight [Kg]	Center of gravity position [mm]		Weight [Kg]
	A	B		A	B	
350.5	1131	2029	3701	1130	2051	3806
390.6	1105	2008	3905	1104	2030	4012
440.6	1120	2008	3966	1119	2030	4074
490.6	1104	2005	4043	1103	2027	4151
560.6	1122	2297	4316	1121	2319	4426
630.6	1106	2294	4393	1105	2316	4504

UNIT **WITH** WATER STORAGE TANK

Unit WITHOUT Hydronic Kit

IR Version

Acustic version	AB-AS			AX		
Mod.	Center of gravity position [mm]		Weight [Kg]	Center of gravity position [mm]		Weight [Kg]
	A	B		A	B	
350.5	1140	1802	3230	1139	1824	3332
390.6	1114	1781	3421	1113	1803	3525
440.6	1129	1781	3478	1128	1803	3583
490.6	1113	1778	3550	1112	1800	3656
560.6	1130	2043	3798	1129	2065	3906
630.6	1114	2040	3870	1113	2062	3979

IP Version

Acustic version	AB-AS			AX		
Mod.	Center of gravity position [mm]		Weight [Kg]	Center of gravity position [mm]		Weight [Kg]
	A	B		A	B	
350.5	1139	1820	3456	1138	1842	3558
390.6	1113	1799	3661	1112	1821	3765
440.6	1128	1799	3722	1127	1821	3826
490.6	1112	1796	3799	1111	1818	3904
560.6	1129	2061	4064	1128	2083	4172
630.6	1113	2058	4141	1112	2080	4250

Unit WITH Hydronic Kit

IR Version

Acustic version	AB-AS			AX		
Mod.	Center of gravity position [mm]		Weight [Kg]	Center of gravity position [mm]		Weight [Kg]
	A	B		A	B	
350.5	1131	2074	3600	1130	2096	3706
390.6	1105	2053	3791	1104	2075	3899
440.6	1120	2053	3848	1119	2075	3956
490.6	1104	2050	3920	1103	2072	4029
560.6	1122	2362	4185	1121	2384	4297
630.6	1106	2359	4257	1105	2381	4369

IP Version

Acustic version	AB-AS			AX		
Mod.	Center of gravity position [mm]		Weight [Kg]	Center of gravity position [mm]		Weight [Kg]
	A	B		A	B	
350.5	1130	2092	3852	1129	2114	3958
390.6	1104	2071	4056	1103	2093	4164
440.6	1119	2071	4117	1118	2093	4225
490.6	1103	2068	4194	1102	2090	4303
560.6	1121	2380	4478	1120	2402	4589
630.6	1105	2377	4555	1104	2399	4667

NOTE: For Desuperheater versions VD the total weight increases of 4%. For Heat recovery versions VR the total weight increases of 10%.

WEIGHT DURING OPERATION AND TRANSPORT

Weight during operation

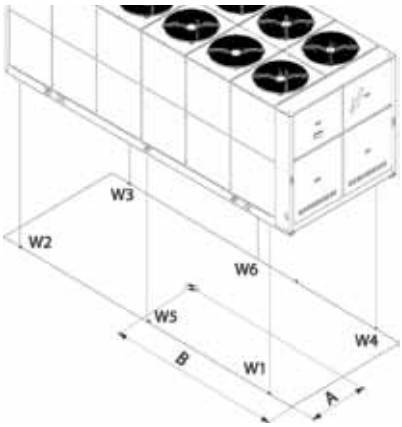

UNIT **WITHOUT** WATER STORAGE TANK

IR VERSION

Unit WITHOUT Hydronic Kit

Acustic version	AB-AS									AX								
Mod.	Center of gravity position [mm]		Load on bearing points [Kg]						Total Weight [Kg]	Center of gravity position [mm]		Load on bearing points [Kg]						Total Weight [Kg]
	A	B	W1	W2	W3	W4	W5	W6		A	B	W1	W2	W3	W4	W5	W6	
350.6	1141	1720	888	141	152	899	514	526	3120	1140	1742	917	145	157	929	531	543	3222
390.6	1115	1699	943	150	162	955	546	558	3313	1114	1721	972	154	167	985	563	576	3417
440.6	1130	1699	959	152	164	971	556	568	3371	1129	1721	989	157	170	1001	573	585	3475
490.6	1114	1696	980	155	168	992	568	580	3443	1113	1718	1010	160	173	1023	585	598	3549
560.6	1131	1939	1048	166	180	1062	607	621	3684	1130	1961	1079	171	185	1092	625	639	3791
630.6	1115	1936	1069	170	183	1082	619	633	3756	1114	1958	1100	175	189	1114	637	651	3865

Unit WITH Hydronic Kit

Acustic version	AB-AS									AX								
Mod.	Center of gravity position [mm]		Load on bearing points [Kg]						Total Weight [Kg]	Center of gravity position [mm]		Load on bearing points [Kg]						Total Weight [Kg]
	A	B	W1	W2	W3	W4	W5	W6		A	B	W1	W2	W3	W4	W5	W6	
350.6	1132	2011	860	306	310	864	583	587	3511	1131	2033	886	316	320	890	601	605	3617
390.6	1106	1990	908	323	327	912	616	620	3705	1105	2012	934	333	337	939	634	638	3813
440.6	1121	1990	922	328	332	926	625	629	3763	1120	2012	949	338	342	953	643	647	3871
490.6	1105	1987	940	335	339	944	637	642	3836	1104	2009	967	344	348	971	655	660	3945
560.6	1123	2279	1003	357	362	1008	680	685	4094	1122	2301	1031	367	372	1035	699	703	4206
630.6	1107	2276	1021	364	368	1026	692	697	4167	1106	2298	1049	373	378	1054	711	716	4280

UNIT **WITH** WATER STORAGE TANK

IR VERSION

Unit WITHOUT Hydronic Kit

Acustic version	AB-AS									AX								
Mod.	Center of gravity position [mm]		Load on bearing points [Kg]						Total Weight [Kg]	Center of gravity position [mm]		Load on bearing points [Kg]						Total Weight [Kg]
	A	B	W1	W2	W3	W4	W5	W6		A	B	W1	W2	W3	W4	W5	W6	
350.6	1133	2189	912	444	456	924	677	690	4102	1132	2197	935	455	467	947	694	708	4206
390.6	1112	2155	955	464	477	967	709	723	4295	1111	2164	978	476	489	991	727	740	4401
440.6	1124	2150	968	471	483	980	719	732	4353	1124	2159	991	482	495	1004	736	750	4459
490.6	1111	2142	984	479	491	997	731	745	4426	1111	2151	1007	490	503	1021	748	762	4532
560.6	1125	2508	1039	506	519	1053	772	787	4676	1125	2516	1064	517	531	1078	790	805	4785
630.6	1112	2499	1056	513	527	1070	784	799	4749	1112	2506	1080	525	540	1094	802	817	4859

Unit WITH Hydronic Kit

Acustic version	AB-AS									AX								
Mod.	Center of gravity position [mm]		Load on bearing points [Kg]						Total Weight [Kg]	Center of gravity position [mm]		Load on bearing points [Kg]						Total Weight [Kg]
	A	B	W1	W2	W3	W4	W5	W6		A	B	W1	W2	W3	W4	W5	W6	
350.6	1126	2378	875	620	623	878	747	751	4494	1125	2389	896	635	638	899	765	768	4601
390.6	1105	2348	913	647	650	916	780	783	4688	1104	2359	934	662	665	937	798	801	4797
440.6	1117	2344	924	654	658	927	789	793	4745	1117	2356	945	670	673	949	807	811	4855
490.6	1104	2337	938	665	668	941	801	805	4818	1103	2349	960	680	683	963	820	823	4929
560.6	1119	2738	990	702	705	994	846	850	5087	1118	2748	1013	717	721	1016	865	869	5201
630.6	1106	2730	1005	712	716	1008	858	862	5161	1105	2741	1027	728	731	1031	877	881	5275

NOTE: For Desuperheater versions VD the total weight increases of 4%. For Heat recovery versions VR the total weight increases of 10%.

WEIGHT DURING OPERATION AND TRANSPORT

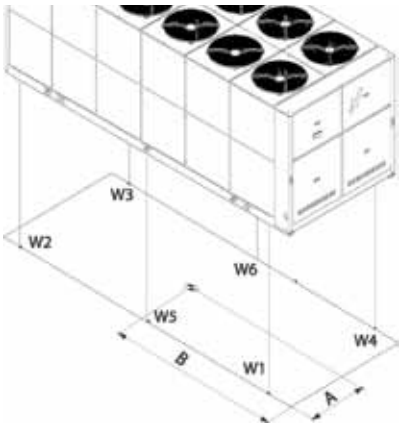

UNIT **WITHOUT** WATER STORAGE TANK

IP VERSION

Unit WITHOUT Hydronic Kit

Acustic version	AB-AS									AX								
Mod.	Center of gravity position [mm]		Load on bearing points [Kg]						Total Weight [Kg]	Center of gravity position [mm]		Load on bearing points [Kg]						Total Weight [Kg]
	A	B	W1	W2	W3	W4	W5	W6		A	B	W1	W2	W3	W4	W5	W6	
350.6	1140	1738	948	150	163	960	549	561	3332	1139	1760	977	155	168	990	566	579	3434
390.6	1114	1717	1007	160	173	1020	583	596	3538	1113	1739	1036	164	178	1050	600	614	3642
440.6	1129	1717	1024	163	176	1037	593	607	3600	1128	1739	1054	167	181	1067	611	624	3704
490.6	1113	1714	1046	166	179	1060	606	620	3677	1112	1736	1076	171	185	1090	623	637	3782
560.6	1130	1957	1119	178	192	1134	649	663	3934	1129	1979	1150	182	197	1165	666	681	4041
630.6	1114	1954	1141	181	196	1156	661	676	4011	1113	1976	1172	186	201	1187	679	694	4119

Unit WITH Hydronic Kit

Acustic version	AB-AS									AX								
Mod.	Center of gravity position [mm]		Load on bearing points [Kg]						Total Weight [Kg]	Center of gravity position [mm]		Load on bearing points [Kg]						Total Weight [Kg]
	A	B	W1	W2	W3	W4	W5	W6		A	B	W1	W2	W3	W4	W5	W6	
350.6	1131	2029	919	327	331	923	623	627	3749	1130	2051	945	336	341	949	641	645	3855
390.6	1105	2008	969	345	349	974	657	662	3956	1104	2030	996	355	359	1000	675	680	4064
440.6	1120	2008	985	351	355	989	668	672	4018	1119	2030	1011	360	364	1016	686	690	4126
490.6	1104	2005	1004	357	362	1008	681	685	4096	1103	2027	1031	367	371	1035	699	703	4205
560.6	1122	2297	1071	381	386	1076	726	731	4372	1121	2319	1099	391	396	1104	745	750	4484
630.6	1106	2294	1091	388	393	1095	739	744	4450	1105	2316	1118	398	403	1123	758	763	4562

UNIT **WITH** WATER STORAGE TANK

IP VERSION

Unit WITHOUT Hydronic Kit

Acustic version	AB-AS									AX								
Mod.	Center of gravity position [mm]		Load on bearing points [Kg]						Total Weight [Kg]	Center of gravity position [mm]		Load on bearing points [Kg]						Total Weight [Kg]
	A	B	W1	W2	W3	W4	W5	W6		A	B	W1	W2	W3	W4	W5	W6	
350.6	1132	2183	961	468	480	974	714	727	4324	1132	2193	984	479	492	997	731	745	4427
390.6	1112	2150	1007	490	503	1020	748	762	4530	1111	2160	1030	501	515	1044	765	780	4635
440.6	1124	2145	1021	496	510	1034	758	772	4591	1123	2155	1044	508	522	1058	776	790	4697
490.6	1111	2137	1038	505	518	1052	771	785	4669	1110	2148	1061	516	530	1075	788	803	4775
560.6	1125	2498	1097	534	548	1112	815	831	4937	1124	2507	1122	546	560	1136	833	849	5046
630.6	1112	2489	1115	542	557	1129	828	843	5014	1111	2498	1139	554	569	1154	846	862	5124

Unit WITH Hydronic Kit

Acustic version	AB-AS									AX								
Mod.	Center of gravity position [mm]		Load on bearing points [Kg]						Total Weight [Kg]	Center of gravity position [mm]		Load on bearing points [Kg]						Total Weight [Kg]
	A	B	W1	W2	W3	W4	W5	W6		A	B	W1	W2	W3	W4	W5	W6	
350.6	1126	2376	923	654	657	927	789	792	4742	1125	2388	944	669	672	948	806	810	4849
390.6	1104	2347	963	683	686	967	823	827	4949	1103	2359	985	698	701	988	841	845	5058
440.6	1117	2343	976	691	695	979	833	837	5011	1116	2356	997	706	710	1000	851	855	5120
490.6	1103	2337	991	702	706	994	846	850	5089	1102	2350	1012	717	721	1016	865	868	5199
560.6	1118	2733	1047	742	745	1050	894	898	5376	1118	2744	1069	757	761	1073	913	917	5489
630.6	1105	2725	1062	752	756	1066	907	911	5454	1104	2737	1084	768	772	1088	926	930	5568

NOTE: For Desuperheater versions VD the total weight increases of 4%. For Heat recovery versions VR the total weight increases of 10%.

HYDRAULIC CONNECTIONS

General rules

A mesh filter (hole Ø ≤ 500 µm) must be installed on the unit's water inlet otherwise warranty is immediately forfeited. The filter performs the function of blocking any foreign matter in the system's plumbing circuit (shavings, machining debris, etc.). This prevents the plate exchanger water pipes from clogging then possibly freezing (and therefore bursting).

Comply with the local laws governing safety matters in order to correctly design the hydraulic circuit. The following information gives suggestions on how to correctly install the unit.
1) Standard supply.
• The unit comes as standard with a differential pressure switch located between the entrance and exit of water exchanger to prevent freezing problems in case of lack of water flow.
The intervention is calibrated to a ΔP of 80 ± 5 mbar, while the reset occurs with a ΔP of 105 ± 5 mbar.
The differential pressure switch contact opens and stop the unit when you reduce the water flow and so ΔP ≤ 80 mbar ± 5.
The differential pressure switch closes and then the unit can restart when the water flow increases and so Δp ≥ 105 mbar ± 5.
• The unit comes standard with an antifreeze heater placed between the evaporator and its insulation controlled by the electronic controller unit.
2) With pumping module accessory.
• Besides the standard accessories, the unit is equipped with all the hydraulic components, as specified in the "Options and accessories" section.

Hydraulic layout of the system

General suggestions
• The pipes must have the least possible number of bends to minimize load losses and must be adequately supported in order to prevent the connections of the unit from being excessively stressed.
• Install on-off valves near components that need to be serviced to isolate them when maintenance work needs to be done and to allow them to be replaced without having to discharge the system.
• Before isolating the pipes and charging the system, carry out preliminary inspections to make sure that there are no leaks.
• Isolate all the chilled water pipes to prevent condensation from forming along the pipes themselves. Make sure that the material used is the steam barrier type, failing this, cover the insulation with an appropriate protection. Also make sure that the air venting valves can be accessed through the insulation.
• Do not forget to install or at least allow for the installation of pressure and temperature reading instruments on the inlet and outlet parts of the hydraulic circuit. These instruments will allow you to monitor the operation of the system.
• The circuit can be kept under pressure by means of an expansion tank (with which the unit is equipped if the pumping module accessory is installed) and a pressure reducer. A plant filling unit can also be used in order to automatically charge the system and keep it at the desired pressure if it drops below a certain pressure value. Install manual or automatic values in the highest point of the system to eliminate air from the circuit.
Fit manual or automatic valves at the highest point in the circuit in order to vent air from the circuit.
• Depending on the chosen accessory, there may be male threaded connections or Victaulic-type joints for hooking up to the unit. The joints allow the pipes to expand due to changes in temperature and in addition the elastomer gasket and the specified play help insulate and absorb noise and vibration.
• If anti-vibration mounts are installed under the unit, it is recommended to use flexible couplings before and after the water circulation pump and near the unit.
• Install a tap on the outlet of the unit in order to regulate the water flow.

Precautions for the Winter

The water could freeze and damage the exchanger of the unit and other parts of the system during the winter period, if the system was to remain at a standstill. This problem can be obviated in 3 different ways:
1. Drain the system completely, taking care to drain the plate exchanger (in order to drain the unit's plumbing system completely, open the water drain ball valves and the air vent valves).
2. Operate with glycol water taking account, depending on the % of glycol, of the factor of correction of the refrigerating capacity, power input, water flow rate and losses of head (see table on following page)
3. If it is certain that the unit will always be powered throughout the winter, the unit is able to protect itself from freezing, down to a temperature of -20°C: this is possible thanks to an antifreeze electric heating element installed on the plate exchanger and intelligent control of the water pump that must be governed by the microprocessor board (see the "Electric Connections" section). If the unit is fitted with a Storage tank, solution no. 3 requires installing the tank antifreeze heating element accessor.

HYDRAULIC CONNECTIONS

Basic diagram Standard Unit VB [COLD WATER CIRCUIT]

The following figures represent connections to the evaporator circuit.
IMPORTANT: There must be a constant flow of water to the exchanger. With accessory primary-secondary pumping module MP SS STD is mandatory to install a water filter in the secondary circuit immediately before of the water tank.

VB + hydronic kit accessory MP AM and MP SS

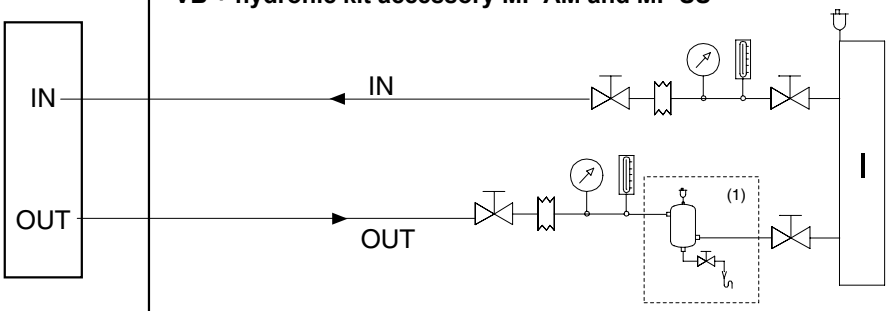

VB + hydronic kit accessory MP PS and only tank SAA

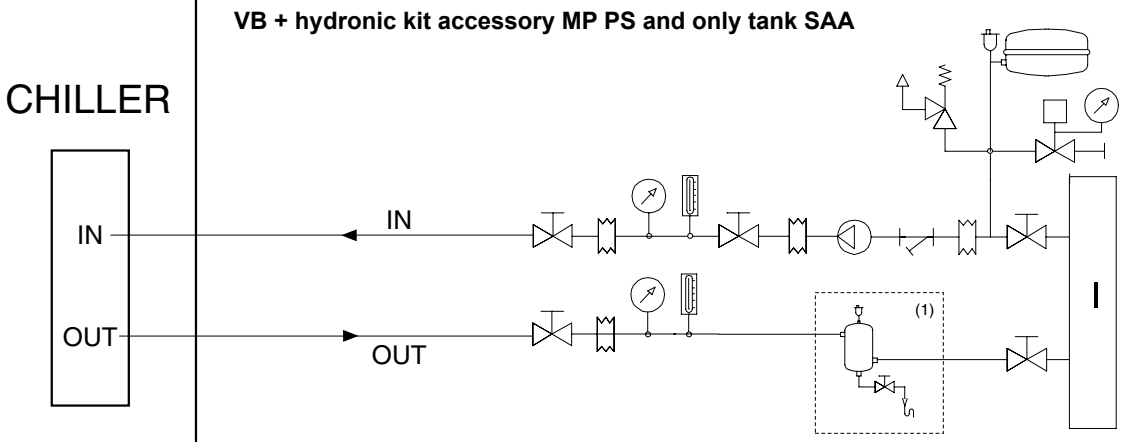

Basic diagram for units with Desuperheater [HOT WATER CIRCUIT]

The basic diagram given is valid for VD-VR version
The figure below shows the basic diagram of the portion of the system with the heat exchanger used for recovering partially heating power that would otherwise be disposed of in the air.

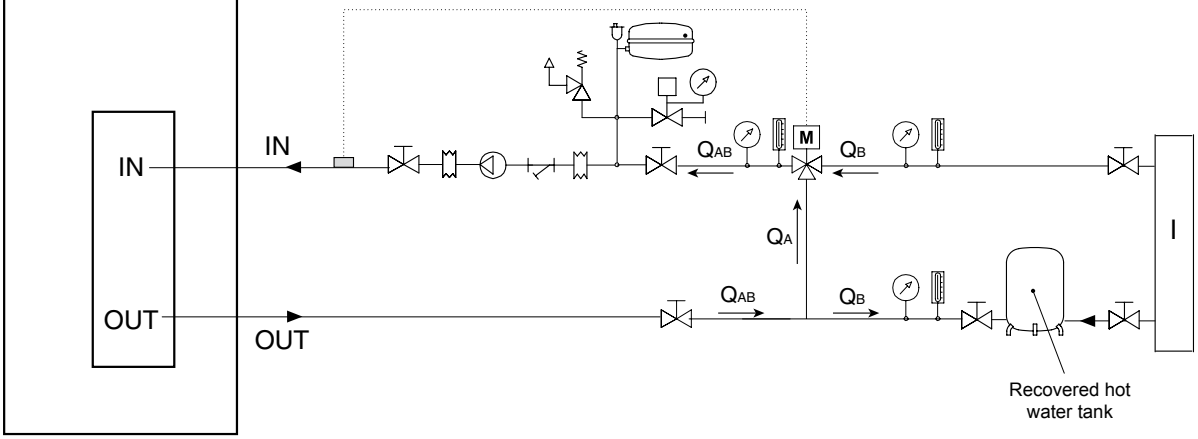

(1): Component not required if the unit is equipped with the “Water storage tank” accessory. Installation of this accessory is recommended if the unit is without it.

I = User system

Pressure gauge

Thermometer

On-off and/or water flow rate regulating valve

Monitoring electronics (governor)

Pump

Filter

Tank

Expansion tank

Air vent valve

Safety valve

Coupling

Water filling unit

Three-way driven valve

Recovery water flow inlet probe

HYDRAULIC CONNECTIONS

Air vent and water drain

On the plumbing circuit feeding the unit, especially when equipped with the Victaulic connection kit, the installer must fit an appropriate number of valves (manual or automatic) at the top of the circuit in order to vent any air in the plumbing system. In the same way, he must install a water drain valve in order, when necessary, to drain the unit's plate exchanger completely (especially during the winter in order to prevent freezing that would seriously jeopardize the operation of the unit). For units with the complete pipe kit there is an air vent valve on the top pipe (water inlet) and a water drain valve on the bottom pipe (water outlet). See "Accessories and options" section.

Plumbing connection with Victaulic couplings and Water flow switch

It is composed of two Victaulic type quick couplers (Fig. 1-A) comprehensive of union (Fig. 1-B) and seal not installed (supplied with the unit). The unions are supplied to be welded on the end. Here we give the instructions to follow for installing the quick couplers.

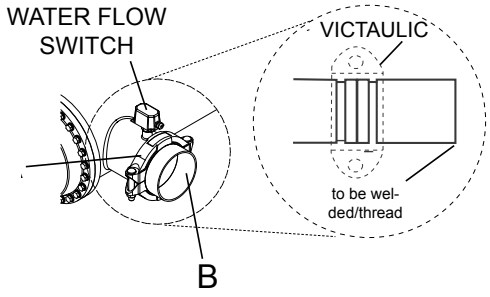

Valve regulating diagram valve

To prevent problems from occurring when the machine is started with very cold water, you are strongly advised to install a mixer valve as shown in the diagram.
The valve must be regulated to suit the temperature at which the water flows into the desuperheater (see diagram): the graph on the right shows the type of adjustment to use.

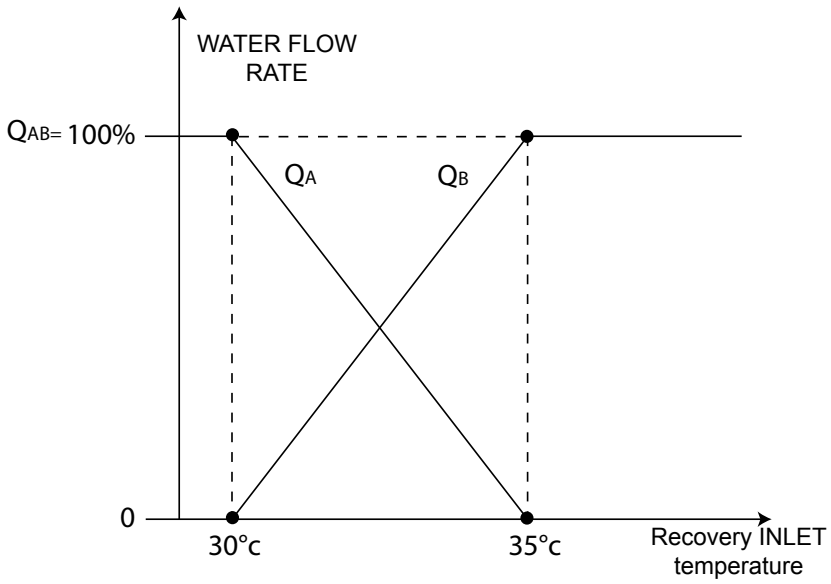

HYDRAULIC CONNECTIONS

ISO-G	DN(mm)	EXTERNAL DIAMETER OD(mm)	A	B	O	D	T
1”	25	33.7	15.875	7.137	30.226	1.600	1.651
11/4”	32	42.4	15.875	7.137	38.989	1.600	1.651
11/2”	40	48.3	15.875	7.137	45.085	1.600	1.651
2”	50	60.3	15.875	8.738	57.150	1.600	1.651
21/2”	65	76.1	15.875	8.738	72.260	1.981	2.108
3”	80	88.9	15.875	8.738	84.938	1.981	2.108
4”	100	114.3	15.875	8.738	110.084	2.108	2.108
5”	125	139.7	15.875	8.738	135.500	2.134	2.769
6”	150	168.3	15.875	8.738	163.957	2.159	2.769
8”	200	219.1	19.050	11.913	214.401	2.337	2.769

1) Pipe groove inspections

Check the depth and diameter of the grooves and their distance from the pipe ends. Make sure that the work has been carried out with care and that the end surface of the pipes is smooth and not ovalized. Make sure that there are no notches, burrs or other imperfections that could impair the tightness. Groove dimensions in mm A=16-B=8-C=57.2-D=1.6

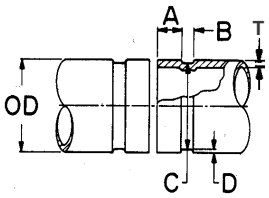

2) Checking the seal and relative lubrication

Make sure that the type of seal used is compatible with the nature and temperature of the fluid. Signal green **EPDM** seals are used.

Apply a film of grease to the seal: on the back, on the side flanks and on the inner lips that contact the pipe. Work in conditions of the utmost cleanliness as particles of dirt could damage the seal. Always and only use synthetic grease. Greasing makes it easier to fit the seal on the pipe and improves the tightness. It also allows the seal to slide within the connection, avoiding tensions and projections near the bolts.

3) How to fit the seal

Fully insert the seal into the end of a pipe. Make sure that the seal lips adhere to the pipe itself.

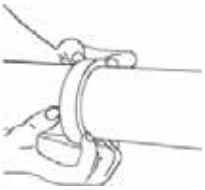

4) Alignment

Align the pipes and move their ends near to each other. Now push the seal, centering it on the two pipe ends. The seal must remain inside the grooves.

5) Joint assembly

Remove one bolt and loosen (without removing) the other one. Seat part of the body of the joint at the bottom, between the pipe ends, inserting and edges of the grooves. Now seat the other part of the body at the top, on the two ends, and close the joint. Make sure that the parts of the body of the joint touch each other.

6) Nut torquing

Fit the previously removed bolt back in place and tighten both nuts by hand. Now torque them with the relative wrench, tightening them alternately a few turns.

WARNING:

If one nut is fully tightened at a time, the seal could slip between the jaws of the opposite side of the joint.

ELECTRICAL CONNECTIONS

General rules

The appliance must be wired in compliance with the laws in force in the country in which it is installed. The units are supplied fully wired in the factory and pre-engineered for connection to the electricity main. The electric panel is made in compliance with the technical standards in force in the European Union.

Structure of the electric panel

All the electrical components are contained in a closed casing protected against the atmospheric agents and inspectionable by opening the front door after removing the front panel. The door for accessing the power section is locked by the mechanism.
Access for the supply cables and earth cable (PE) is permitted through the opening on the botton of the electric panel.

Composition of the system

The system comprises an electromechanical part consisting of the power circuit, with disconnecting device, contactors, fuses or thermal cutouts, transformer, and another part comprising the Microprocessor control system.
NOTES: Refer to the wiring diagram supplied with the unit for the layout of the electric panel.

Electrical connections

All electrical connections must be carried out by qualified personnel in the absence of electric power. The table below gives the electrical specifications of the different constructional configurations of the units.

Compressor specification

UNIT		350.5	390.6	440.6	490.6	560.6	630.6	UM
Power supply		400 - 3 - 50						V-ph-Hz
FLA [A]	CP1A	44.6	44.6	44.6	59.3	59.3	73.8	A
	CP1B	44.6	44.6	44.6	59.3	59.3	73.8	
	CP1C	-	44.6	44.6	59.3	59.3	73.8	
	CP2A	36.4	44.6	59.3	59.3	73.8	73.8	
	CP2B	36.4	44.6	59.3	59.3	73.8	73.8	
	CP2C	36.4	44.6	59.3	59.3	73.8	73.8	
LRA [A]	CP1A	272	272	272	310	310	394	A
	CP1B	272	272	272	310	310	394	
	CP1C	-	272	272	310	310	394	
	CP2A	225	272	310	310	394	394	
	CP2B	225	272	310	310	394	394	
	CP2C	225	272	310	310	394	394	
FLI [kW]	CP1A	27.6	27.6	27.6	36.1	36.1	46.7	kW
	CP1B	27.6	27.6	27.6	36.1	36.1	46.7	
	CP1C	-	27.6	27.6	36.1	36.1	46.7	
	CP2A	22.6	27.6	36.1	36.1	46.7	46.7	
	CP2B	22.6	27.6	36.1	36.1	46.7	46.7	
	CP2C	22.6	27.6	36.1	36.1	46.7	46.7	
Winding resistance ohm [Ω]	CP1A	0.514	0.514	0.514	0.349	0.349	-	-
	CP1B	0.514	0.514	0.514	0.349	0.349	-	
	CP1C	-	0.514	0.514	0.349	0.349	-	
	CP2A	0.630	0.514	0.349	0.349	-	-	
	CP2B	0.630	0.514	0.349	0.349	-	-	
	CP2C	0.630	0.514	0.349	0.349	-	-	

Unit layout

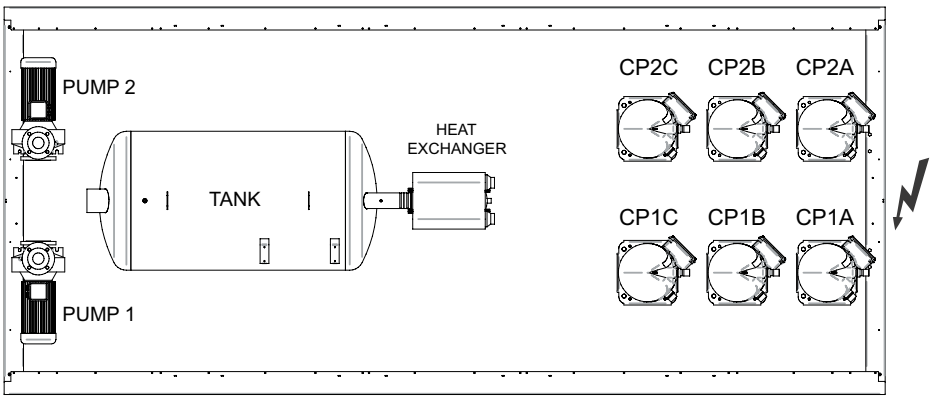

ELECTRICAL CONNECTIONS

Single Fan specifications

UNIT		350.5	390.6	440.6	490.6	560.6	630.6	UM
Power supply		400 - 3 - 50						V-ph-Hz
FLA	AB	4.3						A
LRA	AB	15.0						A
FLI	AB	2.0						kW

Summary Fan specifications

UNIT		350.5	390.6	440.6	490.6	560.6	630.6	UM
Power supply		400 - 3 - 50						V-ph-Hz
FLA	AB	34.4		43.0		51.6		A
LRA	AB	120		150		180		A
FLI	AB	16.0		20.0		24.0		kW

Specifications of pumping module accessory MP PS STD

UNIT		350.5	390.6	440.6	490.6	560.6	630.6	UM
Power supply		400 - 3 - 50						V-ph-Hz
FLA	AB	12.0	12.0	20.8	20.8	20.8	20.8	A
LRA	AB	96.0	96.0	166.4	166.4	166.4	166.4	A
FLI	AB	7.0	7.0	13.0	13.0	13.0	13.0	kW

Specifications of pumping module accessory MP AM STD and MP SS STD

UNIT		350.5	390.6	440.6	490.6	560.6	630.6	UM
Power supply		400 - 3 - 50						V-ph-Hz
FLA	AB	14.0	14.0	20.8	20.8	20.8	20.8	A
LRA	AB	112.0	112.0	166.4	166.4	166.4	166.4	A
FLI	AB	8.2	8.2	13.0	13.0	13.0	13.0	kW

Specifications of pumping module accessory High working head MP AM HP1 and MP SS HP1

UNIT		350.5	390.6	440.6	490.6	560.6	630.6	UM
Power supply		400 - 3 - 50						V-ph-Hz
FLA	AB	20.8	20.8	20.8	20.8	20.8	27.0	A
LRA	AB	166.4	166.4	166.4	166.4	166.4	216	A
FLI	AB	13.0	13.0	13.0	13.0	13.0	16.0	kW

NOTES:
Values valid for **IP** and **IR** units, **STANDARD, LOW NOISE** and **EXTRA LOW NOISE** unit, **WITH** or **WITHOUT** hydronic kit.
FLA= Full load current at maximum tolerated conditions
LRA= Locked rotor current
FLI= Full load power input at maximum tolerated conditions
MIC= Maximum instantaneous current of the unit
Values relative to a **400V~3~50Hz** power supply voltage rating

Summary tables (total values):

Units without pumping module

UNIT	350.5	390.6	440.6	490.6	560.6	630.6	UM
Total maximum load current [FLA]	233	302	355	399	451	494	A
Total maximum power input [FLI]	139.0	182	211.1	237	272	304	kW
Total maximum starting current [MIC]	422	529	605	649	771	815	A
Units with pumping module MP PS STD (1 or 2 pumps)							
Total maximum load current [FLA]	245	314	376	420	472	515	A
Total maximum power input [FLI]	146	189	224	250	285	317	kW
Total maximum starting current [MIC]	434	541	626	670	792	835	A
Units with pumping module MP AM STD and MP SS STD (1 or 2 pumps)							
Total maximum load current [FLA]	247	316	376	420	472	515	A
Total maximum power input [FLI]	147	190	224	250	285	317	kW
Total maximum starting current [MIC]	436	543	626	670	792	835	A
Units with pumping module MP AM HP1 and MP SS HP1 (1 or 2 pumps)							
Total maximum load current [FLA]	254	323	382	426	478	521	A
Total maximum power input [FLI]	152	195	227	253	288	320	kW
Total maximum starting current [MIC]	442	550	632	676	798	842	A

ELECTRICAL CONNECTIONS

1) Connection to the electricity main

• Power supply line;
The machine's power supply line must be laid by following a clearly defined route in order to make it as correct as possible any without any breaks. Pass the line through the opening on the button of the electrical panel. Secure the line integral with the structure of the machine. Then continue inside the panel and connect the conductors directly to the input terminals of the main disconnecting device of the machine.
• Power supply system;
The power cables of the machine's supply line must be taken from a system of symmetrical three-phase voltages and of a separate protection conductor.

V= 400V ± 10%
f= 50 Hz

• Protection on supply side:
An automatic switch must be installed on the supply side of the side in order to protect against any overcurrents and indirect contacts that could occur when the machine is operating.
It is advisable to install an automatic current limiter switch in order to limit the effective short-circuit current in the connecting point of the machine. This allows a protection device with a lower breaking capacity than that required in the connection point to be sized like the main circuit-breaker of the machine.
The line and switch must be coordinated in compliance with the current laws governing electrical safety matters, regarding the type of installation and environmental conditions in which the machine must operate.
• Protection conductor (ground wire):
The protection conductor from the feeder line must be connected straight to the ground screw identified by code **"PE",** which ensures the equipotential connection of all metal grounding points and structural parts of the machine.

2) Electric panel

• Protection degree:
The electric panel casing is made from sheet metal and has IP54 protection rating at the doors directly accessible from the outside. The other parts of the casing guarantee a protection degree that is at least equivalent to **IP22**, as established by the current laws in force: this has been achieved since the panel has further protection against the penetration of solid foreign bodies and atmospheric agents thanks to the machine structure in which it is housed.
• Starting and stopping function:
The red handle on the panel door directly acts on the main circuit-breaker. The handle also acts as a door lock since it ensures that the machine is only powered when the door is shut. The stopping function carried out by the main circuit-breaker is classified as type "0" since the machine is stopped by immediately cutting off the power supply.

3) Reference standards

• The provisions established by the following Directives have been complied with to ensure the safety of the electrical products placed on the European Union market:
- Low Voltage Directive **2006/95 EEC** which also includes the following harmonized standards:
CEI EN 60335-1 and 60335-2-40.
Classification:**CEI EN 60204-1.** Safety of machinery. Electrical equipment of machines. Part 1:
General rules.
- Directive **2004/108/EEC** concerning **"Electromagnetic compatibility".**

4) User connection

On the electric panel are available the terminal connection for:
a) control of a pump group with 1 or 2 pumps and relative safety devices (relay 230V-2A)
b) clear contact input for remote ON/OFF of the unit
The following additional connections are present on Heat recovery versions:
c) general alarm relay (SPDT NO/NC 230V-2A)
d) recovery circulating pump control and relative safety devices (relay 230V-2A)
e) remote input for enabling of recovery mode

For more details refer to the wiring diagram of the unit.

R410A PROTECTION DEVICES

Protection devices HIGH PRESSURE

The unit is protected against risk of overpressure by means of 5 levels protection chain.

Each compressor and so each circuit is equipped with:
1) ATC (Cooling Capacity Control)
2) high pressure transducer connected to electronic controller (if installed)
3) high pressure automatic switch connected to electronic controller
4) high pressure manual switch connected to compressor contactor command and to electronic controller
5) high pressure safety valve

Protection devices technical data

LEVEL	1	2	3	4	5
Device	ATC (Cooling Capacity Control)	High pressure transducer	High pressure automatic switch	High pressure manual switch	High pressure safety valve
Trip out (barg)	-	40.5	41.0	43.0	45.0
Trip in (barg)	-		29.5	31.0	41.0
connected to	electronic controller	electronic controller	electronic controller	compressor contactor command	Discharge the refrigerant to atmosphere to reduce the system pressure
effect	Controls the cooling capacity shutting down compressors	stop the compressor and the fans	stop the compressor and the fans	stop the compressor	Discharge the refrigerant to atmosphere to reduce the system pressure
reset *	Automatic	YES by keyboard after the solution of the problem that generates the alarm	YES by keyboard if the high pressure switch has trip-in and after the solution of the problem that generates the alarm	Reset the button present on the manual pressure switch	Not necessary

*: For more details refers to section monitoring basic system.

Protection devices LOW PRESSURE

LEVEL	1	2
Device	Low pressure transducer	Low pressure automatic switch
Trip out (barg)	2 bar	2 bar
Trip in (barg)	4 bar	4 bar
connected to	electronic controller	electronic controller
effect	stop the compressor.	stop the compressor.
reset *	YES by keyboard after the solution of the problem that generates the alarm	YES by keyboard if the low pressure switch has trip-in and after the solution of the problem that generates the alarm

Protection devices DISCHARGE TEMPERATURE (if installed)

LEVEL	2
Device	Discharge Temperature
Trip out	135°C
Trip in	120°C
connected to	electronic controller
effect	stop the compressor.
reset *	YES by keyboard after the solution of the problem that generates the alarm

*: For more details refers to section monitoring basic system.

SERIAL INTERFACE: RS485 MODBUS® RTU

Protection devices HIGH PRESSURE

Through the accessory interface RS485 MODBUS ® RTU control system is able to communicate with the outside world. The outside world means a master device, usually a supervisory system or a BMS (Building Management System), designed by the customer.

CAUTION :
The use of serial communication must be made by qualified personnel.
The company assumes no responsibility for any damage to the machine due to misuse of the serial interface.

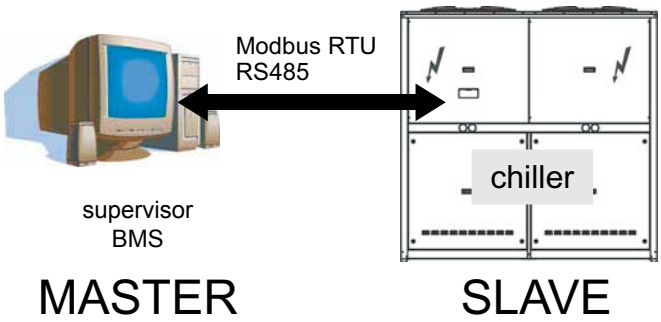

Communication with the machine is with MODBUS ® RTU on RS485 serial network.

RS485 settings of the chiller

Serial communication with the chiller is only possible if you installed accessory: interface RS485 MODBUS ® RTU.
The default parameters of MODBUS ®-RTU are:

Serial address of chiller	1
Protocol	MODBUS®-RTU
Baud rate	9600 b/s
Parity	EVEN

MODBUS ® Address Table: Machine Level

Parameter/Description	Def	Min	Max	U.M.	Type (*)	Decimal Position	Modbus	Modbus HEX	R/W	Notes/Meaning
Chiller on/off					D		340	0154	R/W	
Chiller mode		0	3		I	0	1520	05F0	R	0 = standby 1 = cooling 2 = hot 3 = shut down
Chiller capacity		0	100	%	I	0	1524	05F4	R	
Evaporator water inlet temperature		-50.0	150.0	°C	A	1	1522	05F2	R	
Evaporator water outlet temperature		-50.0	150.0	°C	A	1	1523	05F3	R	
Setpoint 1 chiller mode	7.0	5.0 -8.0 (**)	20.0	°C	A	1	624	0270	R/W	(**) for brine unit
Band 1 chiller mode	1.0	0.5	5.0	°C	A	1	628	0274	R/W	
Setpoint 2 chiller mode	7.0	5.0 -8.0 (**)	20.0	°C	A	1	635	027B	R/W	(**) for brine unit
Band 2 chiller mode	1.0	0.5	5.0	°C	A	1	638	027E	R/W	
Setpoint 1 heatpump mode	45.0	30.0	55.0	°C	A	1	656	0290	R/W	
Band 1 heatpump mode	1.0	0.5	3.0	°C	A	1	660	0294	R/W	
Setpoint 2 heatpump mode	45.0	30.0	55.0	°C	A	1	667	029B	R/W	
Band 2 heatpump mode	1.0	0.5	3.0	°C	A	1	670	029E	R/W	
Current setpoint		-50.0	150.0	°C	A	1	1518	05EE	R	
ALARM Chiller general	0	0	2		I	0	1519	05EF	R	0 = not active 1 = active 2 = resettable
ALARM Plant high temperature	0	0	2		I	0	1245	04DD	R	
ALARM Plant low temperature	0	0	2		I	0	1246	04DE	R	
ALARM Evaporator freezing	0	0	3		I	0	1290	050A	R	0 = not active 1 = automatic 2 = resettable 3 = active
ALARM Evaporator water flow	0	0	3		I	0	1292	050C	R	
ALARM Phase sequence	0	0	3		I	0	1371	055B	R	
ERROR water inlet probe	0	0	1		I	0	1335	0537	R	0 = active 1 = not active
ERROR water outlet probe	0	0	1		I	0	1315	0523	R	
ERROR external air probe	0	0	1		I	0	1375	055F	R	

(*) Type of variable/parameter: **A= Analog; D = Digital; I = Integer**

MODBUS ® Address Table: Pumps Level

Parameter/Description	Def	Min	Max	U.M.	Type (*)	Decimal Position	Modbus	Modbus HEX	R/W	Notes/Meaning
Pump A evaporator status		0	1		D	0	1525	05F5	R	0 = off 1 = on
Pump B evaporator status		0	1		D	0	1526	05F6	R	
Enabling pump A evaporator	1	0	1		D	0	1127	0467	R/W	0 = not enabled 1 = enabled
Enabling pump B evaporator	1	0	1		D	0	1128	0468	R/W	
DAY of use pump A evaporator		0	32000		I	0	1152	0480	R	
DAY of use pump B evaporator		0	32000		I	0	1153	0481	R	
HOUR of use pump A evaporator		0	24	h	I	0	1154	0482	R	
HOUR of use pump B evaporator		0	24	h	I	0	1155	0483	R	
ALARM Evaporator pump A unavailable	0	0	2		I	0	1294	050E	R	0 = not active 1 = active 2 = resettable
ALARM Evaporator pump B unavailable	0	0	2		I	0	1295	050F	R	
ALARM Evaporator pump A thermal	0	0	2		I	0	1296	0510	R	
ALARM Evaporator pump B thermal	0	0	2		I	0	1297	0511	R	

(*) Type of variable/parameter: **A= Analog; D = Digital; I = Integer**

Address Table MODBUS ®: Circuits Level

Parameter/Description	Def	Min	Max	U.M.	Type (*)	Decimal Position	Modbus	Modbus HEX	R/W	Notes/Meaning
Circuit 1 status		0	4		I	0	1551	060F	R	0 = on 1 = alarm 2 = not used 3 = not used 4 = defrost
Circuit 2 status		0	4		I	0	1552	0610	R	
Circuit 1 capacity		0	100	%	I	0	1543	0607	R	
Circuit 2 capacity		0	100	%	I	0	1544	0608	R	
Circuit 1 liquid temperature		-50.0	150.0	°C	A	1	1575	0627	R	
Circuit 2 liquid temperature		-50.0	150.0	°C	A	1	1576	0628	R	
Circuit 1 low pressure		-1.0	-30.0	bar	A	1	2332	091C	R	Only if installed pressure transducer
Circuit 2 low pressure		-1.0	-30.0	bar	A	1	2333	091D	R	
Circuit 1 high pressure		-1.0	-50.0	bar	A	1	1559	0617	R	
Circuit 2 high pressure		-1.0	-50.0	bar	A	1	1560	0618	R	
ALARM Circuit 1 low pressure	0	0	3		I	0	1270	04F6	R	0 = not active 1 = automatic 2 = resettable 3 = active
ALARM Circuit 2 low pressure	0	0	3		I	0	1271	04F7	R	
ALARM Circuit 1 high pressure	0	0	2		I	0	1262	04EE	R	0 = not active 1 = active 2 = resettable
ALARM Circuit 2 high pressure	0	0	2		I	0	1263	04EF	R	
ALARM Circuit 1 electronic expansion valve	0	0	2		I	0	1258	04EA	R	
ALARM Circuit 2 electronic expansion valve	0	0	2		I	0	1259	04EB	R	
ERROR Circuit 1 liquid probe	0	0	1		I	0	1339	053B	R	0 = active 1 = not active
ERROR Circuit 2 ERROR liquid probe	0	0	1		I	0	1340	053C	R	
ERROR Circuit 1 low pressure transducer	0	0	1		I	0	1363	0553	R	0 = active 1 = not active Only if installed pressure transducer
ERROR Circuit 2 low pressure transducer	0	0	1		I	0	1364	0554	R	
ERROR Circuit 1 high pressure transducer	0	0	1		I	0	1327	052F	R	
ERROR Circuit 2 high pressure transducer	0	0	1		I	0	1328	0530	R	

(*) Type of variable/parameter: **A= Analog; D = Digital; I = Integer**

SERIAL INTERFACE: RS485 MODBUS® RTU

MODBUS ® Address Table: Fans Level

Parameter/Description	Def	Min	Max	U.M.	Type (*)	Decimal Position	Modbus	Modbus HEX	R/W	Notes/Meaning
Circuit 1 fans power		0	100	%	I	0	1567	061F	R	0
Circuit 2 fans power		0	100	%	I	0	1568	0620	R	0
ALARM Circuit 1 fans thermal	0	0	2		I	0	1286	0506	R	0 = not active 1 = active 2 = resettable
ALARM Circuit 2 fans thermal	0	0	2		I	0	1287	0507	R	

(*) Type of variable/parameter: **A= Analog; D = Digital; I = Integer**

Address Table MODBUS ®: Compressor Level

Parameter/Description	Def	Min	Max	U.M.	Type (*)	Decimal Position	Modbus	Modbus HEX	R/W	Notes/Meaning
Compressor 1A enable	1	0	1		D	0	800	0320	R/W	0 = not enabled 1 = enabled
Compressor 1B enable	1	0	1		D	0	801	0321	R/W	
Compressor 2A enable	1	0	1		D	0	803	0323	R/W	
Compressor 2B enable	1	0	1		D	0	804	0324	R/W	
Compressor 1A status		0	9		I	0	1527	05F7	R	0 = off 1..5 = not used 6 = on 7 = alarm 8 = not usable 9 = waiting
Compressor 1B status		0	9		I	0	1528	05F8	R	
Compressor 2A status		0	9		I	0	1530	05FA	R	
Compressor 2B status		0	9		I	0	1531	05FB	R	
Compressor 1A capacity		0	100	%	I	0	2370	0942	R	0 = off 100 = on
Compressor 1B capacity		0	100	%	I	0	2371	0943	R	
Compressor 2A capacity		0	100	%	I	0	2373	0945	R	
Compressor 2B capacity		0	100	%	I	0	2374	0946	R	
DAY of use compressor 1A		0	32000		I	0	816	0330	R	
DAY of use compressor 1B		0	32000		I	0	817	0331	R	
DAY of use compressor 2A		0	32000		I	0	819	0333	R	
DAY of use compressor 2B		0	32000		I	0	1014	03F6	R	
HOUR of use compressor 1A		0	24	h	I	0	820	0334	R	
HOUR of use compressor 1B		0	24	h	I	0	821	0335	R	
HOUR of use compressor 2A		0	24	h	I	0	823	0337	R	
HOUR of use compressor 2B		0	24	h	I	0	1018	03FA	R	
ALARM Compressor 1A thermal	0	0	2		I	0	1278	04FE	R	0 = not active 1 = active 2 = resettable
ALARM Compressor 1B thermal	0	0	2		I	0	1279	04FF	R	
ALARM Compressor 2A thermal	0	0	2		I	0	1281	0501	R	
ALARM Compressor 2B thermal	0	0	2		I	0	1282	0502	R	

(*) Type of variable/parameter: **A= Analog; D = Digital; I = Integer**

REFRIGERANT FLOW DIAGRAM - STANDARD UNIT VB

Refrigerant flow diagram in cooling mode IR

	Description
BA	FIN AND TUBE COIL
CP	COMPRESSOR
FD	FILTER DRIER
IDL	LIQUID AND MOISTURE INDICATOR
MAP	HIGH PRESSURE GAUGE
MBP	LOW PRESSURE GAUGE
PAA	AUTO RESET HIGH PRESSURE SWITCH
PAM	MANUAL RESET HIGH PRESSURE SWITCH
PB	AUTO RESET LOW PRESSURE SWITCH
PDW	WATER PRESSURE SWITCH
PP	PRESSURE SOCKET 1/4" SAE WITOUT CORE
PPS	PRESSURE SOCKET 1/4" SAE WITH CORE
PPSS	PRESSURE SOCKET 5/16" SAE WITH CORE
RL	LIQUID BALL VALVE
RM	COMPRESSOR OUTLET BALL VALVE
SIW	WATER INLET PROBE
SL	LIQUID PROBE
SP	PLATE HEAT EXCHANGER
SS	SUPERHEATING PROBE
SUW	WATER OUTLET PROBE
TAP	HIGH PRESSURE TRANSDUCER
TBP	LOW PRESSURE TRANSDUCER
TC	CHARGING TUBE
TP	PRESSURE TRANSDUCER
V	FAN
VSF	SAFETY VALVE
VTE	ELECTRONIC EXPANSION VALVE

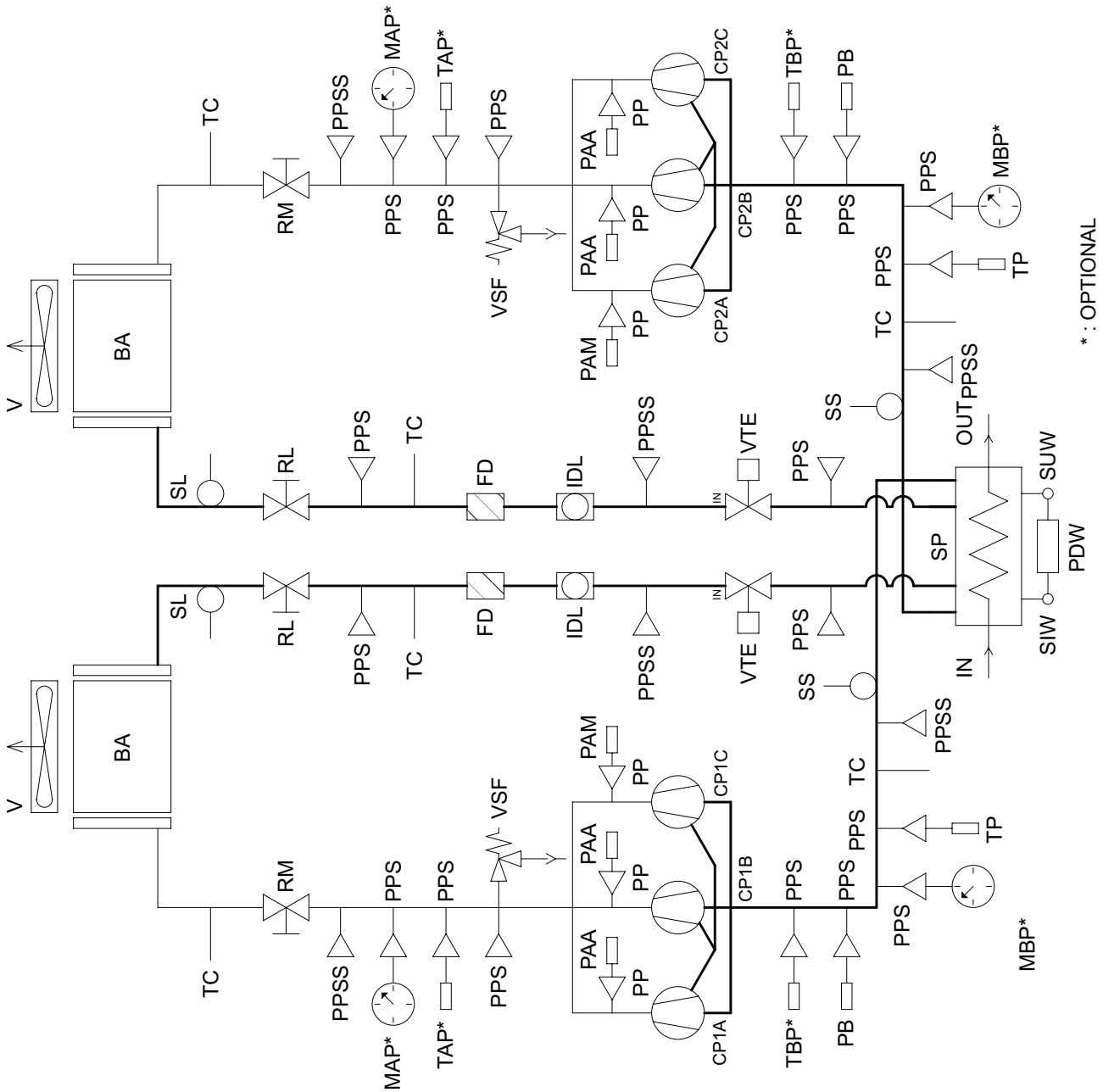

REFRIGERANT FLOW DIAGRAM - STANDARD UNIT VB

Refrigerant flow diagram in heating mode IP

	Description
BA	FIN AND TUBE COIL
CP	COMPRESSOR
FD	FILTER DRIER
IDL	LIQUID AND MOISTURE INDICATOR
MAP	HIGH PRESSURE GAUGE
MBP	LOW PRESSURE GAUGE
PAA	AUTO RESET HIGH PRESSURE SWITCH
PAM	MANUAL RESET HIGH PRESSURE SWITCH
PB	AUTO RESET LOW PRESSURE SWITCH
PDW	WATER PRESSURE SWITCH
PP	PRESSURE SOCKET 1/4" SAE WITHOUT CORE
PPS	PRESSURE SOCKET 1/4" SAE WITH CORE
PPSS	PRESSURE SOCKET 5/16" SAE WITH CORE
RL	LIQUID BALL VALVE
RM	COMPRESSOR OUTLET BALL VALVE
SC	LIQUID RECEIVER
SEP	LIQUID SEPARATOR
SIW	WATER INLET PROBE
SL	LIQUID PROBE
SP	PLATE HEAT EXCHANGER
SS	SUPERHEATING PROBE
SUW	WATER OUTLET PROBE
TAP	HIGH PRESSURE TRANSDUCER
TBP	LOW PRESSURE TRANSDUCER
TC	CHARGING TUBE
TP	PRESSURE TRANSDUCER
V	FAN
VIC	REVERSING CYCLE VALVE
VSF	SAFETY VALVE
VTE	ELECTRONIC EXPANSION VALVE
VU	CHECK VALVE

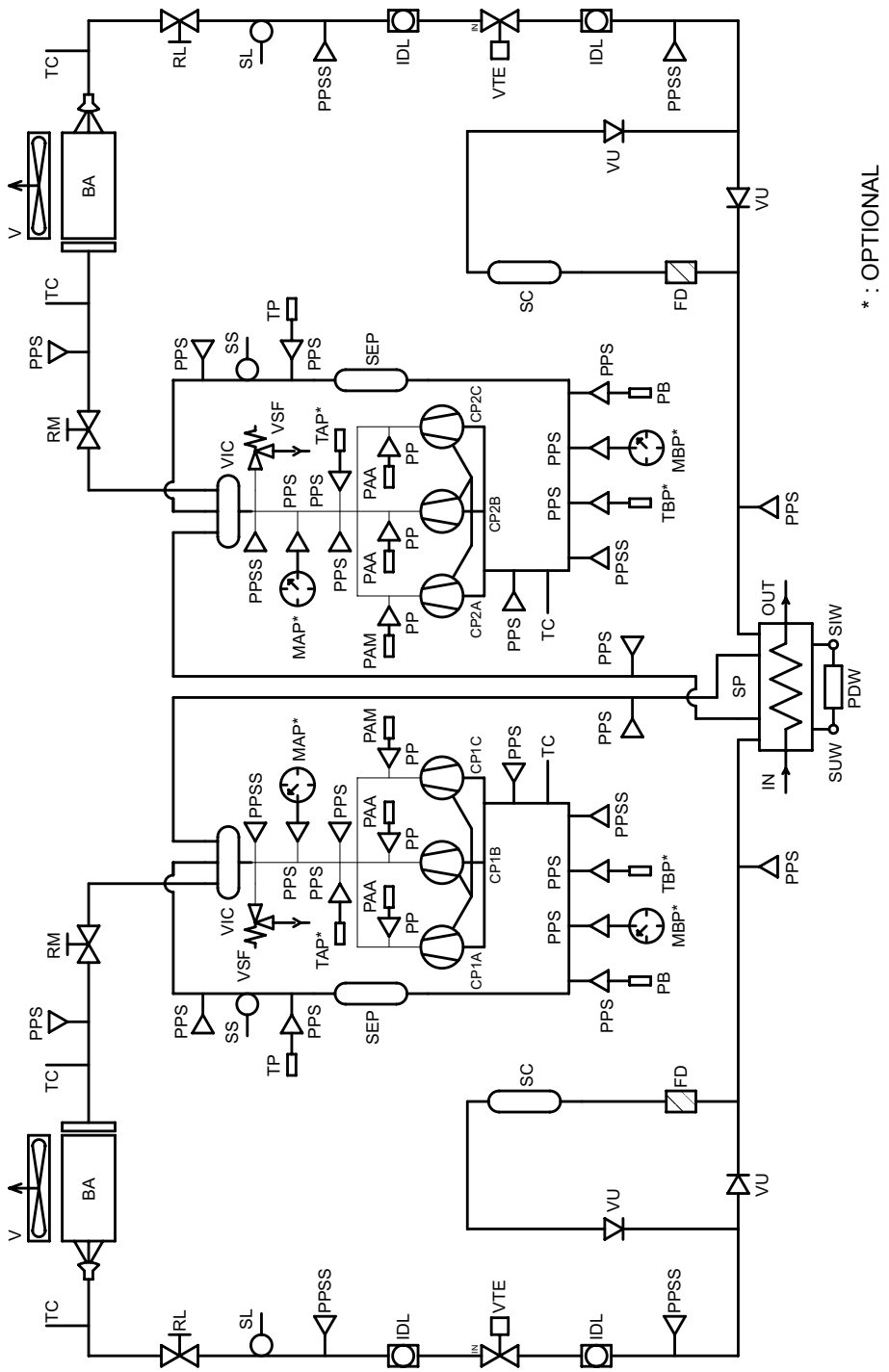

START-UP

General Rules

To validate the contractual warranty, the machine must be set at work by technicians from an authorized assistance center. Before they are called, check to make sure that all parts of the installation have been completed, the unit levelled, the wet connections made with the relative air vent and the electrical connections made.

MAINTENANCE

General Rules

Maintenance is of extreme importance if the plant is to operate in a regular way and give fade-free service. Have extraordinary maintenance work done by qualified and authorized personnel. Comply with the safety precautions given in the relative section of this manual and take all the necessary precautions.
The following information is only a guide for the end user.

Routine maintenance

The inspections described below, to which the unit must be subjected, do not require specific technical know-how.
They merely include a few simple inspections involving certain parts of the unit.
Call an authorized assistance center if actual maintenance work is required.
The table below gives a recommended list of inspections which should be carried out at the indicated intervals.

DESCRIPTION	WEEKLY	MONTHLY	EVERY SIX MONTHS
Visual inspection of the unit			•
Inspection of hydraulic circuit		•	
Inspection of electrical system		•	
Inspection of condensing system		•	
Inspection and adjustment of operat. parameters	•		

• Visual inspection of the structure of the unit
When checking the condition of the parts that form the structure of the unit, pay particular attention to the parts liable to rust.
If traces of rust are noted, they must be treated with rust-inhibitor paint in order to eliminate or reduce the problem.
Check to make sure that the external panels of the unit are well fixed.
Bad fixing gives rise to noise and abnormal vibrations.
• Inspection of hydraulic circuit
Check visually to make sure that there are no leaks in the hydraulic circuit. If the pumping module accessory is installed, it is advisable to make sure that the water filter is clean.
• Inspection of electrical system
Make sure that the power cable that connects the unit to the distribution panel is not torn, cracked or damaged in a way that could impair its insulation.
• Inspection of the condensing system
WARNING: The finned pack exchanger has fins made of aluminium or some other thin material, thus even accidental contact could cause cuts. Comply with the instructions in the relative section.
• Condensing coils
In view of the function of this component, it is very important for the surface of the exchanger to be as free as possible from clogging caused by items that could reduce the fan's air flow rate and, thus, the performances of the unit itself.
The following operations may be required:
- Remove all impurities (such as paper scraps, leaves, etc.) that could be clogging the surface of the bank either by hand or using a brush (comply with the above mentioned safety prescriptions).
- If the dirt has deposited on the fins and is difficult to remove by hand, use a jet of compressed air or pressurized water on the aluminium surface of the coils, remembering to direct the jet in a vertical direction to prevent the fins from being damaged.
- "Comb" the coils with the relative tool, using the appropriate comb spacing for the fins if some parts of them are bent or squashed.
• Helical electric fans
Visually inspect these parts to make sure that the electric fans are well fixed to the bearing grille and that this latter is fixed to the structure of the unit. Bad fixing gives rise to noise and abnormal vibrations.
• Reading and adjustment of the operating parameters
This control can be done using the pressure gauges (if installed) of the refrigerant circuits and using the pressure and temperature gauges (if installed) of the hydraulic circuits of the unit (evaporator + heat recovery - if present)

MAINTENANCE

General considerations

The machine has been designed with a view to reducing the risks to persons and the environment in which it is installed, to the minimum. To eliminate residue hazards, it is therefore advisable to become as familiar as possible with the machine in order to avoid accidents that could cause injuries to persons and/or damage to property.
a. Access to the unit
Only qualified persons who are familiar with this type of machine and who are equipped with the necessary safety protections (footwear, gloves, helmet, etc.) may be allowed to access the machine. Moreover, in order to operate, these persons must have been authorized by the owner of the machine and be recognized by the actual Manufacturer.
b. Elements of risk
The machine has been designed and built so as not to create any condition of risk. However, residue hazards are impossible to eliminate during the planning phase and are therefore listed in the following table along with the instructions about how to neutralize them.

Part in question	Residue hazard	Mode	Precautions
Compressor and delivery pipe	Burns	Contact with the pipes and/or compressor	Avoid contact by wearing protective gloves
Delivery pipes, heat recovery exchanger and coils	Explosion	Excessive pressure	Turn off the machine, check the high pressure switch and safety valve, the fans and condenser
Pipes in general	Ice burns	Leaking refrigerant	Do not pull on the pipes
Electrical cables, metal parts	Electrocution, serious burns	Defective cable insulation, live metal parts	Adequate electrical protection (correctly ground the unit)
Heat exchange coils	Cuts	Contact	Wear protective gloves
Fans	Cuts	Contact with the skin	Do not push the hands or objects through the fan grille

c. Pollution
The unit contains refrigerant gas and lubricating oil. When scrapping the unit these fluids must be recovered and disposed of in compliance with the regulations in force in the country where it is installed. The unit must not be abandoned during the scrapping stage.

Refrigerant safety card

1 SUPPLIER COMPANY AND PRODUCT IDENTIFICATION

Card No.	FRIG 8
Product	R-410A
Supplier company identification	RIVOIRA SpA

2 COMPOSITION / INFORMATION ON INGREDIENTS

Substance / Preparation	Preparation
Components / Impurities	Contains the following components : Difluoromethane (R32) 50 % in weight Pentafluoroethane (R125) 50 % in weight
EEC No.	Non-applicable for mixtures
Trade-name	/ /

3 IDENTIFICATION OF HAZARDS

Identification of hazards	Liquefied gas. The vapours are heavier than air and can cause suffocation, reducing the oxygen available for breathing. Rapid evaporation of the fluid can cause freezing. Can cause cardiac arrhythmia.

4 FIRST-AID MEASURES

Inhalation	Do not administer anything if the person has fainted. Take the person outdoors. Use oxygen or artificial respiration if necessary. Do not administer adrenaline or similar substances.
Contact with eyes	Rinse thoroughly with plenty of water for at least 15 minutes and see a doctor.
Contact with skin	Wash immediately with plenty of water. Immediately remove all contaminated garments.
Swallowing	

5 FIRE-PREVENTION MEASURES

Specific hazards	Increase in pressure.
Dangerous fumes	Halogen acids, traces of carbonyl halides.
Fire-extinguishing means usable	All the known fire-extinguishing means can be used.
Specific methods	Cool the containers/tanks with water sprays.
Special protection equipment	Use self-contained breathing apparatus in confined spaces.

6 MEASURES AGAINST ACCIDENTAL SPILLING OF THE PRODUCT

Personal protection	Evacuate personnel to safe areas. Provide for adequate ventilation. Use personal protection equipment
Protection for the environment	It evaporates.
Product removal methods	It evaporates.

7 HANDLING AND STORAGE

Handling and storage	Ensure an adequate air change and/or extraction in the workplaces. Only use well-ventilated rooms. Do not breathe vapours or aerosols. Carefully close the containers and keep them in a cool, dry and well-ventilated place. Keep in the original containers.
Incompatible products	Explosives, flammable materials, organic peroxides.

8 CONTROL OF EXPOSURE / PERSONAL PROTECTION

Personal protection	Ensure adequate ventilation, especially in closed areas.
Control parameters	Difluoromethane (R32): Recommended exposure limits: AEL (8h and 12h TWA) = 1000 ml/m3 Pentafluoroethane (R125): Recommended exposure limits: AEL (8h and 12h TWA) = 1000 ml/m3
Respiratory tract protection	For rescue and for maintenance works in tanks, use self-contained breathing apparatus. The vapours are heavier than air and can cause suffocation, reducing the oxygen available for breathing.
Eye protection	Total protection glasses.
Hand protection	Rubber gloves.
Hygiene measures	Do not smoke.

9 CHEMICAL-PHYSICAL PROPERTIES

Relative density, gas (air=1)	Heavier than air.
Solubility in water (mg/l)	Not known, but deemed very low.
Appearance	Colourless liquefied gas.
Odour	Similar to ether.
Fire point	Does not ignite.

10 STABILITY AND REACTIVITY

Stability and reactivity	No decomposition if used according to the special instructions.
Materials to be avoided	Alkali metals, alkali-earth metals, granulated metal salts, Al, Zn, Be, etc. in powder.
Hazardous products of decomposition	Halogen acids, traces of carbonyl halides.

11 TOXICOLOGICAL INFORMATION

Local effects	Concentrations substantially above the value TLV (1000 ppm) can cause narcotic effects. Inhalation of highly concentrated products of decomposition can cause respiratory insufficiency (pulmonary oedema).
Long-term toxicity	No carcinogenic, teratogenic or mutagenic effects have been recorded in experiments on animals.
Specific effects	Rapid evaporation of the fluid can cause freezing. Can cause cardiac arrhythmia.

12 ECOLOGICAL INFORMATION

Effects linked to ecotoxicity	Pentafluoroethane (R125) Potential global warming with halocarbides; HGWP (R-11 = 1) = 0.84 Potential impoverishment of the ozone; ODP (R-11 = 1) = 0

13 CONSIDERATIONS ON DISPOSAL

General	Do not dispose of where accumulation can be hazardous. Usable with reconditioning. The depressurised containers must be returned to the supplier. Contact the supplier if instructions for use are deemed necessary.

14 INFORMATION FOR TRANSPORT

Designation for transport	LIQUEFIED GAS N.A.S. (DIFLUOROMETHANE, PENTAFLUOROETHANE)
UN No.	3163
Class/Div	2.2
ADR /RID No.	2, 2nd A
ADR/RID hazard no.	20
ADR label	Label 2 : non-toxic non-flammable gas.
CEFIC Groupcard	20g39 - A
Other information for transport	Avoid transport on vehicles where the loading zone is not separate from the cab. Make sure the driver is informed about the potential risk of the load and knows what to do in case of accident or emergency. Before starting transport, make sure the load is properly secured and : make sure the valve of the container is closed and does not leak; make sure the blind cap of the valve (when provided) is correctly fitted; make sure the cap (when provided) is correctly fitted and that there is an adequate ventilation passage; ensure compliance with the current provisions.

15 INFORMATION ON REGULATIONS

The product must not be labelled according to Directive 1999/45/EC.
Comply with the regulations given below, and the relevant applicable updates and amendments.
Circulars no. 46/79 and 61/81 of the Ministry of Labour : Risks related to the use of products containing aromatic amines
Leg. Decree no. 133/92 : Regulations on the discharge of hazardous substances in waters
Leg. Decree no. 277/91 : Protection of workers against noise, lead and asbestos
Law 256/74, Decree 28/1/92, Leg. Decree no. 52 dated 3/2/97, Decree dated 28/4/97 as amended : Classification, packing and labelling of hazardous substances and preparations
Decree no. 175/88, as amended : Activities with significant accident risks (Seveso Law)
Decree no. 203/88 : Emissions into the atmosphere
Decree no. 303/56 : Work hygiene
Decree no. 547/55 : Regulations on accident prevention
Leg. Decree no.152 dated 11/5/99 : Protection of waters

16 OTHER INFORMATION

Recommended uses	Refrigerant

Can cause suffocation in high concentration.
Keep in a well-ventilated place.
Do not breathe the gas.
The risk of suffocation is often underestimated and must be clearly explained during the training of operators.
Ensure compliance with all the national and regional regulations.
Before using this product in any new process or trial, an in-depth study on safety and compatibility of the product with the materials must be carried out.
The above information is based on our current know-how and describes the product according to the safety requirements. It does not however represent a guarantee and assurance of the qualities in a legal sense. Each person responds personally for compliance with such regulations.

First aid

• Move the victim away from the toxic source, keep him warm and allow him to rest.
• Administer oxygen if necessary.
• Proceed with artificial respiration if necessary.
• Give heart massage in the case of heart failure.
• Immediately seek medical help.

Contact with the skin:
• Immediately thaw the affected parts under running lukewarm water.
• Remove contaminated clothing (garments may stick to the skin in the case of ice burns) if they have not adhered to the skin.
• Seek medical assistance if necessary.

Contact with the eyes:
• Immediately rinse the eyes with physiologic eyewash or clean water for at least 10 minutes with the eyelids pulled open.
• Seek medical assistance if necessary.

Swallowing:
• Do not make the victim vomit. If the victim is conscious, have him rinse his mouth out with clean water and then drink 200, 300 ml of water.
• Immediately seek medical help.
• Do not administer adrenaline or sympathomimetic drugs after exposure owing to the risk of cardiac arrhythmia.
For further information about the characteristics of the refrigerant, consult the technical briefs that can be obtained from manufacturers of refrigerant products.

The manufacturer declines all responsibility for any inaccuracies in this manual due to printing or typing errors.
The manufacturer reserves the right to modify the products contents in this catalogue without previous notice.

NOTE

COD. 3QE28790

GRUPPO FERROLI

Ferroli spa ¬ 37047 San Bonifacio (Verona) Italy ¬ Via Ritonda 78/A
tel. +39.045.6139411 ¬ fax +39.045.6100933 ¬ www.ferroli.it