Description

- Three or two stages with one ignition stage forced draught burner.
- Fuel: light oil, viscosity 6 mm²/s by 20°C, net calorific value 11,86 kWh/kg.
- Maximum heat power: 3 300, 3 700, 4 200 and 5 000 kW.
- 1st/3rd stage ratio: 1/3 with two nozzles and two pressures.
- Two combustion head lengths.
- Escargot type architecture:
  - Optimal accessibility,
  - Simplified maintenance,
  - Preserved burner head adjustments,
- Closing of the air flap on burner shut-down.
- Complete electrical equipment in a switch cabinet mounted on the burner with control panel.
- Three-phase electrical power supply.
- Protection level IP 51.
- Maximum working temperature 60°C.
- In compliance with the EN 267 norm and European Guidelines such as:
  - EMC 89/336/EEC
  - Low voltage 73/23/EEC
  - Efficiency 92/42/EEC

Connecting flange

Ø a (mm)	b (mm)	c	d
360	430	M12	60°

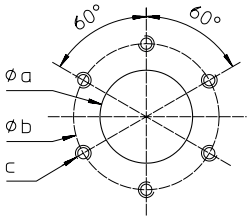

Packaging

The burner is delivered complete with:
- Hoses and nozzles,
- Boiler fixing accessories,
- Directions for use including electrical diagram, exploded view & spare parts list.

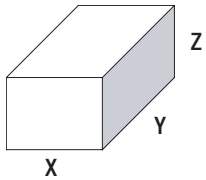

Dimensions (mm)			Gross weight
X	Y	Z	(kg)
1040	1550	750	125 … 160

Dimensions

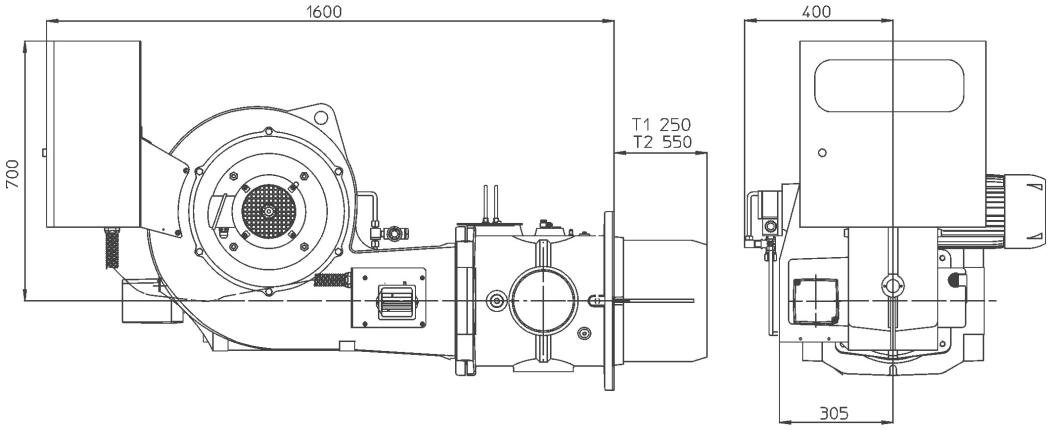

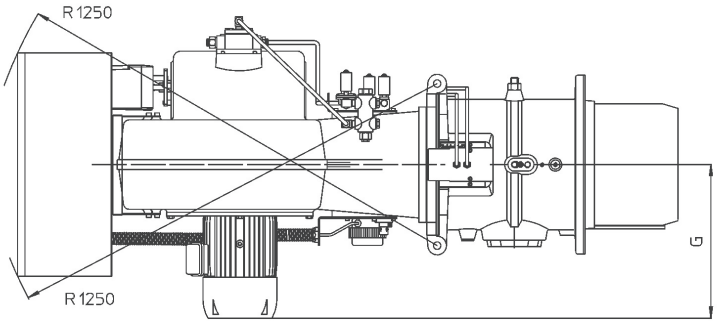

Type	Cote G (mm)
ES 08.2800 L-Z3	370
ES 08.3700 L-Z3	395
ES 08.4000 L-Z3	425
ES 08.5000 L-Z3	480

Range: ES 8.2800 L-Z3, ES 08.3700 L-Z3, ES 08.4000 L-Z3, ES 08.5000 L-Z3 1200 ... 5000 kW 2 stage progressive mechanical

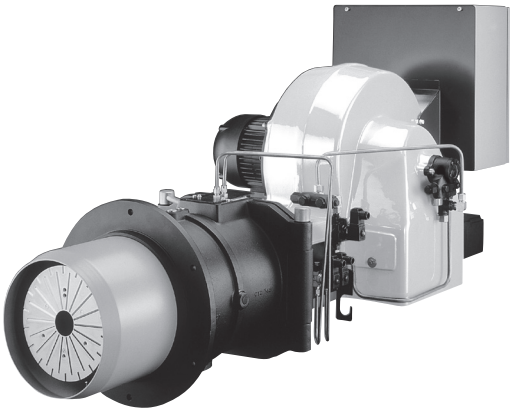

Working fields

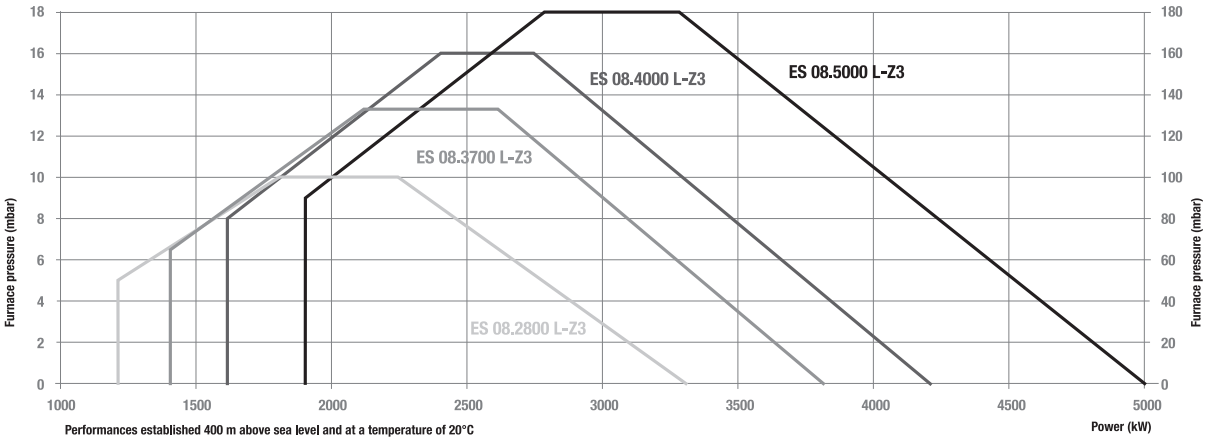

Characteristics and equipment

Type		ES 08.2800 L-Z3	ES 08.3700 L-Z3	ES 08.4000 L-Z3	ES 08.5000 L-Z3
Operating range		1200 - 3300 kW	1400 - 3700 kW	1600 - 4200 kW	1900 - 5000 kW
Nozzles		According to requested power			
Fuel flow		101 ... 278 kg/h	118 ... 312 kg/h	135 ... 354 kg/h	160 ... 422 kg/h
Control box		LAL 1.25			
Fan motor		2800 rpm - 230/400 V 50 Hz - 3 kW	2800 rpm - 230/400 V 50 Hz - 4 kW	2800 rpm - 230/400 V 50 Hz - 5,5 kW	2800 rpm - 230/400 V 50 Hz - 11 kW
Pump		NVBGRPIC			
Order-No	KN	on resquest			
	KL	on resquest			

Options

Counter face plate		13 018 500
Potentiometer (1x1000Ω, I max. 50 mA)		13 018 502
Potentiometer (1x1000Ω, I max. 0,1 mA)		13 018 504
Potentiometer (2x1000Ω, I max. 50 mA)		13 018 503
Potentiometer (2x1000Ω, I max. 0,1 mA)		13 018 505
Digital power regulation (hot water, immersion probe)		13 008 099
Digital power regulation (hot water, strap-on probe)		13 008 100
Digital power regulation (hot air)		13 008 101
Digital power regulation (steam)		13 008 103
Speed-controler	3	3 832 693
	4TT	3 832 694
	5,5TT	3 832 695
	7,5TT	3 832 696
	11TT	3 832 697

Order N°

ES 08.2800 L-Z3	on request
ES 08.3700 L-Z3	on request
ES 08.4000 L-Z3	on request
ES 08.5000 L-Z3	on request

Basic spare parts

Ignition transformer		13 016 673
Ignition electrode		13 015 851
Baffle plate	ES 08.2800 L-Z3	13 015 797
	ES 08.3700 L-Z3	13 015 794
	ES 08.4000 L-Z3	13 015 791
	ES 08.5000 L-Z3	13 015 791
Control box		13 016 385
Flame detector		13 015 687